DSpace Institution

DSpace Repository **http://dspace.org**

Psychology Dissertations

2026-08

þÿ R e l a t i o n s a m o n g S t u d e n t s P e

þÿ o f T e a c h e r s C o n s c i o u s D i s c i p

Family-Related Factors, and Academic Achievement Among Secondary School Students: The Mediating Roles Of Academic Motivation and Academic Responsibility

Mekedem, Tamiru

http://ir.bdu.edu.et/handle/123456789/17532

Downloaded from DSpace Repository, DSpace Institution's institutional repository



BAHIR DAR UNIVERSITY

COLLEGE OF EDUCATION, SCHOOL OF EDUCATIONAL SCIENCES

DEPARTMENT OF PSYCHOLOGY

RELATIONS AMONG STUDENTS' PERCEPTIONS OF TEACHERS' CONSCIOUS DISCIPLINE, FAMILY-RELATED FACTORS, AND ACADEMIC ACHIEVEMENT AMONG SECONDARY SCHOOL STUDENTS: THE MEDIATING ROLES OF ACADEMIC MOTIVATION AND ACADEMIC RESPONSIBILITY

BY

MEKEDEM TAMIRU JEMBERU

August, 2026

BAHIR DAR, ETHIOPIA

BAHIR DAR UNIVERSITY

COLLEGE OF EDUCATION, SCHOOL OF EDUCATIONAL SCIENCES

DEPARTMENT OF PSYCHOLOGY

Relations Among Students' Perceptions of Teachers' Conscious Discipline, Family-Related Factors, and Academic Achievement Among Secondary School Students: The Mediating Roles of Academic Motivation and Academic Responsibility

By

Mekedem Tamiru Jemberu

A dissertation submitted in partial fulfillment of the requirements for the degree of Doctor of Philosophy in Educational Psychology

Principal advisor: Professor Reda Darge Negasi

Co-Advisor: Professor Dawit Asrat Getahun

August, 2026

BAHIR DAR, ETHIOPIA

© 2026 Mekedem Tamiru Jemberu

Declaration

This is to certify that the thesis entitled "*Relations Among Students' Perceptions of Teachers' Conscious Discipline, Family-Related Factors, and Academic Achievement Among Secondary School Students: The Mediating Roles of Academic Motivation and Academic Responsibility*," submitted in partial fulfillment of the requirements for the degree of Doctor of Philosophy in Educational Psychology in the Department of Psychology at Bahir Dar University, is an original work carried out by me and has not been submitted to this or any other institution for any other degree or certificate. The assistance I received during this investigation has been duly acknowledged.

Mekedem Tamiru Jemberu	_____	_____	Bahir Dar, Ethiopia
Name of the candidate	Signature	Date	Place

BAHIR DAR UNIVERSITY

COLLEGE OF EDUCATION, SCHOOL OF EDUCATIONAL SCIENCES

DEPARTMENT OF PSYCHOLOGY

Approval of Dissertation for Defense

I hereby certify that I have supervised, read, and evaluated this dissertation titled "*Relations Among Students' Perceptions of Teachers' Conscious Discipline, Family-Related Factors, and Academic Achievement Among Secondary School Students: The Mediating Roles of Academic Motivation and Academic Responsibility"* by Mekedem Tamiru Jemberu, prepared under my guidance. I recommend that the thesis/dissertation be submitted for oral defense.

Professor Reda Darge Negasi

_____	_____	_____
Principal Advisor's Name	Signature	Date

Professor Dawit Asrat Getahun

_____	_____	_____
Co-Advisor's Name	Signature	Date

Dr. Alemayehu Belay Emagnaw

_____	_____	_____
Department's Head Name	Signature	Date

BAHIR DAR UNIVERSITY

COLLEGE OF EDUCATION, SCHOOL OF EDUCATIONAL SCIENCES

DEPARTMENT OF PSYCHOLOGY

Approval of Dissertation for the defense result

As members of the board of examiners, we examined this dissertation entitled "*Relations Among Students' Perceptions of Teachers' Conscious Discipline, Family-Related Factors, and Academic Achievement Among Secondary School Students: The Mediating Roles of Academic Motivation and Academic Responsibility"* by Mekedem Tamiru Jemberu. We hereby certify that the dissertation is accepted for fulfilling the requirements for the award of the degree of "Doctor of Philosophy in Educational Psychology".

Board of Examiners

External examiner name	Signature	Date
_____	_____	_____
Internal examiner name	Signature	Date
_____	_____	_____
Chairperson's name	Signature	Date
_____	_____	_____

Acknowledgments

Above all, I am deeply grateful to God Almighty for His abundant grace, wisdom, strength, and unfailing blessings. His constant guidance, protection, and faithfulness sustained me and gave me hope throughout this journey.

I express my profound gratitude to my principal advisor, Professor Reda Darge, for his genuine empathy, exceptional mentorship, intellectual rigor, and unwavering support. His insightful guidance, constructive criticism, and thoughtful feedback greatly strengthened this dissertation's conceptual foundation, methodological design, and analytical depth. I am equally grateful to Professor Dawit Asrat Getahun, whose scholarly insights and professional support significantly enhanced this work's clarity and academic quality.

I also express my sincere thanks to Dr. Tiruwork Tamiru and Dr. Amare Sahle, Associate Professors, for their invaluable mentorship and encouragement throughout my coursework and for their critical guidance in developing my research proposal.

I am grateful to Bahir Dar University, particularly the Department of Psychology, for fostering a supportive, intellectually stimulating academic environment. My sincere appreciation also goes to Injebara University for generously sponsoring my doctoral studies and providing the financial support that made this achievement possible.

I gratefully acknowledge the school supervisors and teachers at Ethio-Japan, Menkorer, Tekele Haymanot, and Debeza Secondary Schools for their cooperation in facilitating access to participants and enabling smooth data collection. I am especially indebted to the students who participated in this study; their willingness, time, and commitment were essential to the success of this research.

I also wish to thank Dr. Getahun Tadesse, Dr. Henos Ejigu, and Dr. Mulugeta Gebremariam for their friendship, encouragement, and moral support throughout this journey. In particular, I am deeply grateful to Dr. Getahun Tadesse for his brotherly love, steadfast encouragement, and genuine empathy. His generosity and kindness have left a lasting impact on my academic and personal life.

My deepest gratitude goes to my wife, Wegenie Asnake, and our beloved children, Daniel, Helen, and Edelawit. Their unconditional love, patience, understanding, and countless sacrifices carried me through this demanding process. My wife gracefully shouldered many family responsibilities so I could pursue my studies, and she never stopped believing in my dreams, even in the most difficult times. To my dear children, whose laughter, love, and patience continually renewed my motivation, I offer my heartfelt appreciation. This accomplishment is a testament to our family's enduring unity and love.

Finally, I thank my entire extended family for their unwavering prayers, sacrifices, and constant encouragement. This achievement belongs to them as much as it does to me.

DEDICATION

I dedicate this work to the blessed memory of my beloved father, Qomos Abba Melake Tsehay Tamiru Jemberu, whose life was devoted to God through a sacred vocation of celibacy, faith, humility, and selfless service. Though he embraced a life of spiritual commitment, he lovingly raised me from childhood, offering unwavering care, guidance, and sacrifice. His steadfast support, moral example, and deep commitment to my education laid the foundation for who I am. His enduring legacy continues to inspire me at every step of my academic and personal journey. May Almighty God grant his soul eternal peace and a place in His heavenly kingdom as a reward for his faithful life, boundless love, and countless sacrifices.

Abstract

This study examined the mediating roles of academic motivation and academic responsibility in the relationships among family-related factors (parenting style and parental behavior), students' perceptions of teachers' conscious discipline, and academic achievement among secondary school students. Guided by Ecological Systems, Self-Determination, Social Cognitive, and Self-Regulated Learning Theories, the study investigated how family and school environments influence academic achievement through students' intrapersonal characteristics. A correlational design was used with secondary school students in Debre Markos, Ethiopia. Using a multistage sampling procedure, 496 students provided complete, usable responses. Data were collected using adapted, culturally validated measures of parenting style, parental behavior, students' perceptions of teachers' conscious discipline, academic motivation, and academic responsibility. Data on academic achievement were obtained from school records. The data were analyzed using descriptive statistics, correlation analysis, confirmatory factor analysis, and structural equation modeling. The findings revealed significant positive relationships among parenting style, parental behavior, students' perceptions of teachers' conscious discipline, academic motivation, academic responsibility, and academic achievement. Parental behavior showed both direct and indirect effects on academic achievement through academic motivation and academic responsibility as mediators, indicating significant partial mediation. In contrast, parenting style and students' perceptions of teachers' conscious discipline influenced academic achievement only indirectly through academic motivation and academic responsibility, indicating full mediation. The model explained substantial variance in academic achievement and fit the data well. The findings highlight the importance of supportive family practices, positive teacher–student interactions, and the promotion of students' motivation and responsibility in enhancing academic achievement. Integrated family–school interventions are recommended to improve academic achievement.

Keywords: academic achievement, academic motivation, academic responsibility, parenting style, parental behavior, teachers' conscious discipline

Table of Contents

Contents Page

Acknowledgments v

Abstract viii

Chapter One: Introduction 1

1.1. Background of the Study 1

1.2. Statement of the Problem 8

1.3. Objectives of the Study 15

1.4. Research Questions 15

1.5. Significance of the Study 16

1.5.1. Practical Contributions 16

1.5.2. Theoretical Contributions 17

1.6. Delimitations of the Study 19

1.6.1. Geographical and Population Delimitation 19

1.6.2. Conceptual Delimitation 20

1.7. Operational Definition of the Key Terms 22

Chapter Two: Review of Related Literature 25

2.1. Theoretical Literature Review 25

2.1.1. Concepts and Theories of Teachers' Conscious Discipline 25

2.1.2. Theoretical Foundations of Teachers' Conscious Discipline 27

2.1.3. Concept and Dimensions of Parenting Style 29

2.1.4. Theoretical Perspectives on Parenting Style 31

2.1.5. Concepts and Dimensions of Parental Behavior 34

2.1.6. Theoretical Models of Parental Behavior 37

2.1.6.1. Parental Acceptance–Rejection Theory 37

2.1.6.2. Parental Involvement Models: The Psychological "Why" 37
2.1.6.3. Family Engagement Frameworks 38
2.1.7. Concepts and Theories of Academic Motivation 38
2.1.7.1. Intrinsic vs extrinsic motivation 38
2.1.7.2. Self-Determination Theory (SDT) 39
2.1.7.3. Expectancy-Value Theory 39
2.1.7.4. Achievement Goal Theory (AGT) 40
2.1.8. Concepts and Theories of Academic Responsibility 40
2.1.8.1. Self-Regulation Theory (SRL) 41
2.1.8.2. Personal responsibility models 41
2.1.8.3. Internalization of discipline 42
2.1.8.4. Development of autonomous responsibility 42
2.2. Empirical Literature Review 43
2.2.1. The Relationship between Teachers' Conscious Discipline and Academic Motivation 44
2.2.2. The Relationship between Teachers' Conscious Discipline and Academic Responsibility 47
2.2.3. The Relationship between Teachers' Conscious Discipline and Academic Achievement 51
2.2.4. The Relationship between Parenting Style and Academic Motivation 54
2.2.5. The Relationship between Parenting Style and Academic Responsibility 55
2.2.6. The Relationship between Parenting Style and Academic Achievement 58
2.2.7. The Relationship between Parental Behavior and Academic Motivation 60
2.2.8. The Relationship between Parental Behavior and Academic Responsibility 61
2.2.9. The Relationship between Parental Behavior and Academic Achievement 63
2.2.10. The Relationship between Academic Motivation and Academic Responsibility 65
2.2.11. The Relationship between Academic Motivation and Academic Achievement 68

2.2.12. The Relationship between Academic Responsibility and Academic Achievement 71
2.3. Summary of Reviewed Literature 73
2.4. Conceptual Framework of the Study 76
Chapter Three: Materials and Methods 88
3.1. Research paradigm 88
3.2. Research approach 89
3.3. Research design 89
3.4. Study area, population, sample size, and sampling techniques 90
3.4.1. Study area 90
3.4.2. Study population and sample size 92
3.4.3. Sampling Technique 94
3.5. Variables 95
3.6. Data Collection Tools 96
3.6.1. Measures of Students' Perceptions of Teachers' Conscious Discipline 96
3.6.2. Measures of Family-Related Variables (Parenting Style & Parental Behavior) 97
3.6.2.1. Measures of Parenting Style 97
3.6.2.2. Measures of Parental Behavior 98
3.6.3. Measures of Academic Motivation 99
3.6.4. Measures of School Learning Responsibility Scale (SLRS) 101
3.6.5. Students' Average Achievement Score (AAS) 102
3.7. Instrument Validations 103
3.7.1. Translation and Cultural Adaptation of Research Instruments 103
3.7.1.1. Forward Translation 104
3.7.1.2. Synthesis of the Forward Translations 105
3.7.1.3. Backward Translation 105

3.7.1.4. Expert Committee Review 106
3.7.2. Pilot Study 108
3.7.2.1. Measurement Model Evaluation 109
iii) Evaluation of the Second-Order Measurement Model 120
3.8. Data Collection Procedures of The Main Study 134
3.8.1. Administration of Research Instruments 134
3.8.2. Data Collectors and Training 135
3.9. Data Analysis Procedures 136
3.9.1. Preliminary Data Processing 136
3.10. Method of data analysis 140
3.11. Ethical consideration 141
Chapter Four: Results 142
4.1. Descriptive statistics of the study variables 143
4.2. Correlations among the main study variables 144
4.3. Mediation Analysis Using Full Structural Equation Modeling 149
Chapter Five: Discussion and Implications 161
5.1. Relationships among key study variables 162
5.1.1. Family-Related Factors (Parenting Style and Parental Behavior) and Academic Achievement 162
5.1.2. Students' Perceptions of Teachers' Conscious Discipline and Academic Achievement 163
5.1.3. Academic motivation, responsibility, and academic achievement 164
5.2. Contributions of Family-Related Factors, Students' Perceptions of Teachers' Conscious Discipline, and Intrapersonal Factors to Students' Academic Achievement 166
5.2.1. Parental Behavior as a Predictor of Academic Achievement 167
5.2.2. Parenting Style as a Predictor of Academic Achievement 168

5.2.3. Students' Perceptions of Teachers' Conscious Discipline as a Predictor of Academic Achievement 169
5.2.4. Academic Motivation as a Predictor of Academic Achievement 171
5.2.5. Academic Responsibility as a Predictor of Academic Achievement 172
5.3. Contributions of Family-Related Factors and Students' Perceptions of Teachers' Conscious Discipline to Academic Motivation and Responsibility 173
5.3.1. Parental Behavior as a Predictor of Academic Motivation and Responsibility 173
5.3.2. Parenting Style as a Predictor of Academic Motivation and Responsibility 176
5.3.3. Students' Perceptions of Teachers' Conscious Discipline as a Predictor of Academic Motivation and Responsibility 179
5.4. Academic Motivation and Responsibility as Mediators of the Effect of Family-Related Factors and Students' Perceptions of Teachers' Conscious Discipline on Academic Achievement 181
5.4.1. Academic Motivation as a Mediator between Parental Behavior and Academic Achievement 181
5.4.2. Academic Motivation as a Mediator between Parenting Style and Academic Achievement 183
5.4.3. Academic Motivation as a Mediator between Students' Perceptions of Teachers' Conscious Discipline and Academic Achievement 185
5.4.4. Academic Responsibility as a Mediator between Parental Behavior and Academic Achievement 186
5.4.5. Academic Responsibility as a Mediator between Parenting Style and Academic Achievement 187
5.4.6. Academic Responsibility as a Mediator between Students' Perceptions of Teachers' Conscious Discipline and Academic Achievement 189
5.5. Implications of the Study 190
5.5.1. Theoretical Implications 190

5.5.2. Practical Implications 194
Chapter Six: Conclusion, Limitations, and Recommendations 200
6.1. Conclusion 200
6.2. Limitations of the Study 203
6.3. Recommendations 205
6.3.1. For Families and Parent-Engagement Programmes 205
6.3.2. For Teachers and Teacher-Training Institutions 205
6.3.3. For Schools and School Leaders 206
6.3.4. For Education Authorities and Policymakers 206
6.3.5. For School Counsellors 206
6.3.6. Recommendations for Future Research 207
References 208
APPENDICES 250

Lists of Tables

Table 1: Content Validity Index (CVI) 107

Table 2: Measurement Model: Factor Loadings, Reliability, and Convergent Validity 128

Table 3: Discriminant Validity Analysis 133

Table 4: Descriptive Statistics for Study Variables 143

Table 5: Pearson Correlations Among Study Variables 146

Table 6: Direct Effects of Predictor Variables on Mediators and Academic Achievement 155

Table 7: Indirect and Total Effects on Students' Academic Achievement: Results from User-Defined Estimands in AMOS 156

Lists of Figures

Figure 1. Hypothesized Conceptual Framework of the Study. 79

Figure 2. Confirmatory factor analysis of the four-factor students' perceptions of teachers' conscious discipline measurement model (n = 220). 115

Figure 3. Confirmatory factor analysis of the four-factor parenting style measurement model (n = 220). 116

Figure 4. Confirmatory factor analysis of the five-factor parental behavior measurement model (n= 220). 117

Figure 5. Confirmatory factor analysis of the seven-factor academic motivation measurement model (n = 220)..... 119

Figure 6. Confirmatory factor analysis of the two-factor academic responsibility measurement model (n = 220).... 120

Figure 7. Second-Order Measurement Model for Perceived Teachers' Conscious Discipline (PTCD) With Four First-Order Latent Components and Standardized Coefficients (n = 496). 123

Figure 8. Second-Order Measurement Model for Parenting Style (PS) With Four First-Order Latent Components and Standardized Coefficients (n = 496). 124

Figure 9. Second-Order Measurement Model for Parental Behavior (PB) With Five First-Order Latent Components and Standardized Coefficients (n = 496). 125

Figure 10. Second-Order Measurement Model for Academic Motivation (AM) With Seven First-Order Latent Components and Standardized Coefficients (n = 496). 126

Figure 11. Second-Order structural measurement model representing Perceived Teacher Conscious Discipline (PTCD), Parenting Style (PS), Parental Behavior (PB), Academic Motivation (AM), and Academic Responsibility (AR), with standardized coefficients (n = 496). 149

Figure 12. Structural model showing the direct relationships among parental behavior (PB), parenting style (PS), students' perceptions of teachers' conscious discipline (PTCD), students' intrapersonal factors (academic motivation (AM) and academic responsibility (AR)), and academic achievement (ACHS). 152
Figure 13. Full Structural Equation Model Illustrating the Relationships among students' perceptions of Teachers' Conscious Discipline, Parenting Style, Parental Behavior, Academic Motivation, Academic Responsibility, and Academic Achievement. 160

ABBREVIATIONS AND ACRONYMS

AM	Academic Motivation
AMOS	Analysis of Moment Structures
AR	Academic Responsibility
AVE	Average Variance Extracted
CFA	Confirmatory Factor Analysis
CFI	Comparative Fit Index
CR	Composite Reliability
CMIN/DF	Chi-square divided by degrees of freedom
CVI	Content Validity Index
EFA	Exploratory Factor Analysis
EST	Ecological System Theory
GFI	Goodness-of-Fit Index
KMO	Kaiser-Meyer-Olkin
LRDC	Learning Responsibility During Class
LROC	Learning Responsibility Outside Class
M	Mean
Max	Maximum
Min	Minimum
MoE	Ministry of Education
N	Number of participants
NFT	Normed-Fit Index
PB	Parental Behavior

PBS	Parental Behavior Scale
PPSS	Perceived Parenting Style Scale
PTCD	Perceived Teacher Conscious Discipline
RMSEA	Root Mean Square Error of Approximation
SCT	Social Cognitive Theory
SD	Standard Deviation
SDT	Self-Determination Theory
SLRS	School Learning Responsibility Scale
SPSS	Statistical Package for the Social Sciences
SRMR	Standardized Root Mean Square Residual
TLI	Tucker–Lewis Index
UNESCO	United Nations Educational, Scientific and Cultural Organization

Chapter One: Introduction

This chapter establishes the theoretical context and rationale for the investigation. It systematically presents the research problem, identifies the study objectives, and states the research questions that guide the inquiry. The chapter then articulates the study's practical and theoretical significance, explains the study's delimitations, and provides operational definitions of key constructs used throughout this dissertation.

1.1. Background of the Study

Academic achievement is a key indicator of students' educational success and a primary measure of educational effectiveness (Costa et al., 2024; Steinmayr et al., 2014). Secondary education, serving as the bridge between basic and higher education, plays a crucial role in preparing individuals for further learning or vocational engagement, thereby contributing significantly to national economic growth (Keller, 2006; World Bank, 2005).

Despite substantial expansion in educational access over the past three decades, Ethiopia continues to face significant challenges in improving the quality of learning and academic achievement. Although enrollment rates have increased considerably at both the primary and secondary levels, these gains in access have not been matched by comparable improvements in learning outcomes. National and international reports indicate that many students fail to attain expected levels of academic proficiency, resulting in what has been described as a learning crisis. For example, recent estimates suggest that approximately 90% of Ethiopian children are unable to read and comprehend an age-appropriate text by age 10, reflecting serious deficiencies in foundational learning (United Nations Educational, Scientific and Cultural Organization International Institute for Capacity Building in Africa [UNESCO-IICBA], 2025; UNICEF

Ethiopia, 2025). Moreover, educational progression remains a challenge, with only about one-third of students advancing to secondary education, while dropout, repetition, and low completion rates continue to undermine educational effectiveness (UNICEF Ethiopia, 2025). Despite notable investments through national initiatives such as the General Education Quality Improvement Program, concerns regarding learning achievement, educational quality, and equitable outcomes persist, particularly among students from disadvantaged backgrounds and underserved regions (Global Education Monitoring Report, 2026). National assessment reports indicate that many secondary school students fail to meet expected grade-level competencies in core subjects, reflecting a substantial learning gap (MoE, 2020). In addition, Ethiopian secondary education continues to face challenges, including low student engagement, weak academic motivation, and a limited sense of academic responsibility. Research indicates that many students are primarily driven by external or controlled forms of motivation rather than by autonomous and intrinsic engagement (Gebre et al., 2026). These challenges highlight the need to examine the factors that contribute to academic success and the mechanisms by which they influence academic achievement.

Research consistently shows that academic achievement results from multiple factors operating at multiple levels. Personal characteristics, behavioral patterns, and institutional contexts all contribute to student success. Evidence from Ethiopia likewise suggests that academic achievement is associated with multiple, interacting factors. At the individual level, students' effort, motivation, maturity, and prior academic preparation are significant predictors of achievement (Tadese et al., 2022). At the institutional level, perceived campus climate and student engagement contribute to students' academic achievement (Berhanu & Sabanci, 2020; Berhanu & Sewagegn, 2024). Contemporary educational psychology further emphasizes that achievement

should be understood in terms of both in-school and out-of-school factors, with family environments serving as foundational developmental contexts that substantially influence student learning and motivation (UNESCO, 2017).

The relationships among family environment, school context, student motivation, responsibility, and academic achievement can be explained by complementary theoretical perspectives. Self-Determination Theory (SDT) holds that human motivation and optimal functioning are shaped by the satisfaction of three basic psychological needs: autonomy, competence, and relatedness (Ryan & Deci, 2020). When students experience autonomy-supportive parenting and emotionally responsive teacher interactions, these needs are met, fostering intrinsic motivation and sustained engagement in learning. Conversely, controlling environments tend to undermine motivation and reduce academic persistence.

Ecological Systems Theory (EST) further emphasizes that human development occurs within multiple, interconnected environmental systems, particularly the microsystems of family and school (Bronfenbrenner, 1979). Interactions among these systems (mesosystem) play a crucial role in shaping students' development. In this regard, consistency or inconsistency between parenting practices and school disciplinary approaches can significantly influence students' academic adjustment and achievement.

Social Cognitive Theory (SCT) holds that learning occurs through observation, modeling, and reinforcement in social contexts (Bandura, 1986). Students develop academic behaviors, self-regulation, and beliefs about their capabilities through interactions with significant others, such as parents and teachers. Accordingly, supportive parental involvement and teachers' positive behavioral modeling foster academic self-efficacy, responsibility, and achievement-oriented behaviors. Together, these theories provide a comprehensive framework for understanding how

environmental contexts influence students' internal psychological processes, which in turn shape academic achievement.

Family-related factors, including parenting style and parental behavior, are critical out-of-school determinants of academic achievement. Parenting style refers to the overall emotional and structural climate parents create, characterized by varying levels of warmth, responsiveness, demandingness, and structure (Darling & Steinberg, 1993). From an SDT perspective, warm, autonomy-supportive parenting styles promote intrinsic motivation by satisfying students' psychological needs for relatedness and autonomy. Similarly, active parental behavioral engagement enhances students' sense of competence and academic self-regulation. Within this broader parenting context, parental behavior encompasses the specific practices through which parents engage in their children's education, such as supervising homework, establishing consistent study routines, providing direct academic support, and maintaining regular communication with teachers (Ding, 2014; Patterson & Capaldi, 1990). Together, parenting style and parental behavior shape children's academic experiences and contribute to their academic achievement.

These two dimensions of parental influence operate through partially distinct yet complementary mechanisms. While parenting style establishes the emotional foundation and psychological security within which children develop intrinsic motivation and internalize academic values, parental behavior provides direct support and demonstrates the importance of education through concrete actions. Prior research has shown that an authoritative parenting style, characterized by emotional warmth, clear expectations, and active parental engagement, is linked to higher academic achievement across diverse cultural contexts (Hayek et al., 2022; Jeynes, 2007; Pinquart, 2017). In Ethiopia, recent studies have documented a shift from traditionally authoritarian practices toward more authoritative approaches in urban academic settings, where

authoritative parenting is most conducive to academic achievement (Assefa & Sintayehu, 2019; Dagnew, 2018; Mihret et al., 2019).

Despite extensive research demonstrating the influence of family on academic achievement, most prior studies have focused on direct effects while overlooking the psychological mechanisms by which family factors shape it. In particular, how parenting style and parental behavior affect students' developing motivation and sense of responsibility remains underexplored. This is critical because understanding these mechanisms clarifies not only whether families matter but also how their influence operates, whether through direct behavioral support, the cultivation of internal motivation, the development of self-regulatory responsibility, or a combination of these pathways.

Teachers are another important environmental influence on students' academic achievement. Beyond subject-matter expertise and instructional techniques, research increasingly recognizes that teachers' socio-emotional competencies profoundly shape students' academic achievement. Teachers' conscious discipline, a comprehensive approach that integrates empathy, encouragement, emotional composure, and positive framing of student interactions, has emerged as a particularly influential dimension of teacher effectiveness (Bailey, 2015; Hamre & Pianta, 2020). From SDT and SCT perspectives, teachers' conscious discipline satisfies students' psychological needs and provides positive behavioral models. Empathy fosters relatedness, encouragement builds competence, composure models self-regulation, and positive framing promotes autonomy-supportive learning environments. These practices contribute to students' academic engagement, self-efficacy, and persistence.

Furthermore, empathy helps teachers understand students' emotional and academic challenges, fostering positive relationships that boost motivation and engagement.

Encouragement, which entails providing specific feedback focused on effort, strengthens students' belief in their abilities and improves performance. Emotional composure, the teacher's ability to remain self-regulated under pressure, models self-control and signals that academic challenges are manageable. Positive intent, which frames classroom demands as supportive guidance rather than punishment, encourages students to internalize behavioral standards. Together, these dimensions address adolescents' fundamental psychological needs for relatedness, competence, and autonomy, creating classroom environments where intrinsic motivation thrives (Ryan & Deci, 2018).

In the Ethiopian educational context, where teaching has traditionally emphasized subject mastery and top-down discipline, the role of teachers' conscious discipline as a distinct factor influencing achievement remains underexplored. Although global research highlights the effectiveness of this framework, especially in early childhood and elementary settings, its application to adolescents in secondary schools in collectivist, low-resource environments warrants further investigation. This extension is crucial because secondary students simultaneously seek greater autonomy while navigating complex developmental transitions that require relational support and emotional scaffolding.

While family and teacher factors create external developmental contexts, students' intrapersonal characteristics, particularly academic motivation and academic responsibility, directly shape learning behaviors and achievement. Academic motivation encompasses the internal and external forces that energize learning, and research consistently shows that intrinsic motivation is positively associated with higher achievement and persistence (Niehaus et al., 2012). Academic responsibility is students' sense of ownership, accountability, and self-direction in their learning, including their willingness to persevere through challenges, manage their time effectively, monitor their progress, and take initiative in academic tasks (Mills, 2004; Yilmaz & Aktan, 2021).

Importantly, these intrapersonal factors do not develop in isolation. SDT suggests that motivation is fostered when environmental contexts satisfy psychological needs, while SCT explains that responsibility develops through observational learning, reinforcement, and the development of self-efficacy. Accordingly, supportive parenting and effective teacher practices are expected to cultivate both academic motivation and responsibility, which, in turn, enhance academic achievement. When parents provide both emotional support and behavioral structure, students gain confidence in their academic abilities and recognize the importance of education, fostering intrinsic engagement (Grolnick & Ryan, 1989; Jeynes, 2007; Pomerantz et al., 2007). When teachers respond empathetically, express confidence in students' potential, and maintain emotional composure, students internalize responsibility for their learning and develop self-regulatory skills. Understanding how family and teacher influences translate into these internal resources is essential for explaining why environmental support predicts academic achievement.

Although extensive research has examined the direct effects of family- and teacher-related factors on academic achievement, several gaps remain. First, limited attention has been paid to the psychological mechanisms through which these environmental factors influence achievement, particularly academic motivation and academic responsibility. Second, most existing studies in Ethiopian contexts have focused on isolated predictors rather than on integrated models that combine family, school, and intrapersonal variables. Third, the applicability of socio-psychological theories such as SDT, EST, and SCT to explaining these relationships in Ethiopian secondary school settings remains underexplored.

Therefore, this study addresses these gaps by examining relationships among secondary school students’ perceptions of teachers’ conscious discipline, family-related factors, academic motivation, academic responsibility, and academic achievement. Specifically, it investigates how

academic motivation and academic responsibility mediate the effects of family and teacher factors on academic achievement. By integrating multiple theoretical perspectives, the study aims to provide a more comprehensive understanding of the mechanisms underlying academic achievement in Ethiopian secondary education.

1.2. Statement of the Problem

Academic achievement among secondary school students in Ethiopia remains a critical and persistent challenge despite substantial investments in educational expansion over the past three decades. Evidence from national assessments and official reports shows persistently low learning outcomes, with large proportions of students failing to meet expected competency standards in core subjects (MoE, 2020; World Bank, 2021). Pass rates on the Ethiopian Secondary School Leaving Examination at Grades 10 and 12 have been particularly low in recent years, with only about 3–5% of Grade 12 candidates scoring at or above the 50% threshold required for university entry in 2022–2024 (Ethiopian Monitor, 2024; FurtherAfrica, 2023). Secondary education completion rates remain low: lower-secondary completion is estimated at roughly 30–35%, and upper-secondary completion at around 15–17% (World Bank, 2021). High dropout and non-completion rates mean that a substantial share of students who enter secondary education do not finish the cycle, often linked to academic difficulties and other barriers (UNICEF Ethiopia, 2022; World Bank, 2021). Among those who remain enrolled, relatively few achieve the grades needed to progress to higher education or skilled employment.

Performance data from the Ethiopian Secondary School Leaving Examination (ESSLE) provide concrete evidence of the severity of the achievement challenge. Recent years have shown particularly concerning trends. After a period of higher reported pass rates (often in the 40–60%

range in the years immediately preceding 2022), Grade 12 pass rates (defined as scoring ≥50%) fell sharply to approximately 3.3% in 2022 and 3.2% in 2023, before a modest recovery to 5.4% in 2024 and 8.4% in 2025 (MoE, 2023, 2024, 2025; Policy Studies Institute, 2025). Many secondary schools recorded zero students reaching the pass threshold in these years. Performance in core subjects remains weak. National Learning Assessment and examination analyses have repeatedly documented low mean scores in mathematics and language subjects, with mathematics particularly challenging; very few students achieve high scores (e.g., 70 or above) that would indicate strong foundational numeracy for STEM pathways (MoE, 2020).

Achievement challenges are not uniformly distributed across Ethiopia but show significant regional variation, reflecting disparities in educational quality, resource distribution, and socioeconomic context. Secondary students in urban centers such as Addis Ababa, Dire Dawa, and major regional capitals achieve NSLE pass rates of approximately 40-50%, while rural students' pass rates average 10-15%, representing a 3-5-fold difference (World Bank, 2021). While Addis Ababa achieves an NSLE pass rate of approximately 48%, regions such as Somali, Afar, and Benishangul-Gumuz achieve pass rates below 8%, indicating extreme regional inequity (EES, 2023). Even within regions, disparities are marked: elite government schools in urban areas achieve pass rates of 60-70%, while rural and small-town schools average 15-25%, suggesting that educational quality varies dramatically by school location and resources.

Several structural and systemic challenges specific to Ethiopian secondary education contexts contribute to low achievement. First, Ethiopian secondary education has historically emphasized teacher-directed instruction, rote learning, and passive student engagement (Assefa & Sintayehu, 2019). Students are expected to absorb information rather than engage in critical thinking or problem-solving, an approach that conflicts with contemporary understanding of

adolescent learning and motivation. Second, traditional Ethiopian educational approaches emphasize discipline, respect for authority, and behavioral compliance over relational support and emotional development. As a result, students' psychological needs for autonomy, competence, and relatedness are not intentionally addressed in classrooms, and teachers receive minimal training in socio-emotional competencies or relational teaching approaches. Third, many Ethiopian families, particularly in rural areas, have limited engagement with schools beyond enrollment. Parental involvement often emphasizes compliance over collaborative support for learning, and communication between families and schools about student progress remains inconsistent, limiting coordinated support.

Resource and capacity constraints pose additional barriers to the effectiveness of secondary schools in Ethiopia. Many Ethiopian secondary schools face severe resource limitations, including overcrowded classrooms with an average of 60-80 students, insufficient instructional materials, and inadequate facilities (MoE, 2020; World Bank, 2021). Teachers often lack access to professional development in evidence-based instructional practices or relational competencies, and low salaries and working conditions hinder the recruitment and retention of qualified educators (Assefa & Sintayehu, 2019; MoE, 2020; Tadesse, 2018). Secondary school enrollment has expanded dramatically, with the gross enrollment ratio rising from 15% in 2000 to approximately 52% in 2023 (EES, 2023; UNESCO Institute for Statistics, 2023). Yet this expansion has not been matched by quality assurance mechanisms, as many newly constructed secondary schools lack adequate infrastructure, trained teachers, or curricula aligned with educational standards (World Bank, 2021). This pattern creates a "quantity without quality" scenario in which access has increased substantially, but learning outcomes have not improved correspondingly (MoE, 2020).

Despite these well-documented challenges, research on the psychological and relational mechanisms by which family and school contexts influence secondary students' achievement in Ethiopia remains limited. Most educational improvement efforts in Ethiopia have focused on infrastructure expansion, curriculum revision, and subject-matter teacher training, areas where investments have not yielded commensurate gains in achievement. Contemporary educational psychology increasingly recognizes that improving academic achievement requires understanding not only which factors matter, such as family engagement, teacher quality, and student motivation, but also how they operate. In particular, greater attention has been given to the psychological mechanisms through which supportive family environments and emotionally responsive teachers contribute to students' academic achievement. Despite these advances, important empirical, contextual, methodological, and theoretical gaps remain in the literature, limiting a comprehensive understanding of how family- and teacher-related factors influence academic achievement among secondary school students. The present study addresses these gaps.

Empirical Gap

Although prior research has established that family and teacher factors influence academic achievement, significant gaps remain in understanding the specific mechanisms through which these influences operate. Existing research does not clearly distinguish between the differential effects of parenting style and parental behavior on academic achievement. Although both parenting style and parental behavior have been positively correlated with academic achievement, researchers have yet to thoroughly examine the relative strength of these associations and their distinct pathways. Some studies have even found no significant associations between parenting style and achievement (Banayad et al., 2024; Joshi et al., 2003), suggesting that the relationship may be more nuanced than simple direct effects.

In addition, although teachers' conscious discipline has shown promise for improving classroom outcomes in early childhood and elementary settings (Anderson et al., 2022; Hoffman et al., 2009; Rain, 2014), its application to secondary school students remains largely unexplored. The extent to which teachers' empathy, encouragement, composure, and positive intent influence secondary school students' academic achievement, and the mechanisms through which these factors operate, warrant further investigation.

Most critically, the literature offers limited examination of how family- and teacher-related factors influence academic achievement through students' intrapersonal mechanisms. Although previous research has established that parental support (Gonida & Urdan, 2007; Sha et al., 2016) and positive teacher–student relationships (Bailey, 2015; Hamre & Pianta, 2008) are associated with academic achievement, the specific processes by which these environmental influences translate into students' academic motivation and responsibility remain insufficiently understood. Emerging evidence suggests that internal factors, including academic motivation, self-efficacy, and responsibility, serve as important mediators linking environmental support to academic achievement (Usher & Pajares, 2008; Wigfield et al., 2015). However, integrated models that simultaneously examine family and teacher influences operating through these intrapersonal pathways remain scarce.

Contextual Gap

This limitation is particularly pronounced in the Ethiopian context. In Ethiopia, traditional authoritarian parenting practices, characterized by high demandingness, low responsiveness, strict hierarchy, and the use of physical punishment or fear-based control, have long been common (Cherie & Berhanie, 2015; Ringness & Gander, 1974). Contemporary studies, however, report mixed patterns: some find authoritative parenting to be the most prevalent overall, particularly for

daughters, while others identify authoritarian parenting as dominant, especially in certain secondary-school samples; neglectful/uninvolved and permissive styles also appear, with notable variation by child gender, urban/rural location, and informant (Abesha, 2012; Cherie & Berhanie, 2015; Mihret et al., 2019). Understanding how different parenting dimensions currently influence academic achievement remains important for informing contextually relevant family support initiatives. Likewise, the application of teachers' conscious discipline to secondary school students in Ethiopian settings has received little attention. Whether family support cultivates students' internal motivation and sense of responsibility for learning, how teachers' relational competencies foster students' psychological resources, and whether these family and teacher influences operate through complementary mechanisms specific to Ethiopian adolescent development contexts remain unclear and require systematic investigation.

Methodological Gap

Methodologically, most existing studies have examined family and teacher influences separately or relied on simple correlational designs that do not test mediation pathways. Integrated structural models that simultaneously assess the effects of parenting style, parental behavior, and students' perceptions of teachers' conscious discipline on academic achievement through the dual mediators of academic motivation and academic responsibility are rare, particularly in non-Western and collectivist contexts.

Theoretical Gap

Existing literature leaves key propositions in major developmental and educational theories insufficiently examined in the Ethiopian secondary-school context. Self-Determination Theory (Ryan & Deci, 2020) posits that supportive social environments foster academic achievement by

satisfying students' needs for autonomy, competence, and relatedness, thereby promoting internalized motivation. It remains unclear, however, whether family-related factors and students' perceptions of teachers' conscious discipline influence achievement through similar motivational processes or whether they contribute differentially to the development of academic responsibility. Social Cognitive Theory (Bandura, 1986) emphasizes that environmental influences shape self-regulatory behaviors through observation, modeling, and reinforcement. Yet limited research has examined how parenting practices and students' perceptions of teachers' conscious discipline jointly contribute to students' sense of academic responsibility and achievement. Likewise, Ecological Systems Theory (Bronfenbrenner, 1979) highlights the interconnected influences of family and school environments on development, but relatively few studies have investigated how these microsystems operate simultaneously via academic motivation and responsibility. Examining these relationships within a unified model would therefore clarify how environmental supports from family and school are transformed into academic achievement.

The present study addresses these gaps by examining the relationships among family-related factors (parenting style and parental behavior), students' perceptions of teachers' conscious discipline, students' intrapersonal factors (academic motivation and responsibility), and academic achievement among secondary school students in Ethiopia. Specifically, it tests whether students' motivation and responsibility mediate the effects of family and teacher factors on academic achievement and whether different environmental influences operate through distinct psychological pathways.

1.3. Objectives of the Study

The general objective of this study was to examine the direct and indirect effects of family-related factors and teachers' use of conscious discipline on secondary school students' academic achievement, with academic motivation and academic responsibility serving as mediators.

Accordingly, this study aimed to:

1. Examine relationships among family-related variables (parenting style and parental behavior), students' perceptions of teachers' conscious discipline variables (empathy, encouragement, positive intent, and composure), students' intrapersonal factors (academic motivation and academic responsibility), and students' academic achievement.
2. Assess the extent to which family-related variables, students' perceptions of teachers' conscious discipline, and students' intrapersonal factors independently predict students' academic achievement.
3. Examine the mediating roles of academic motivation and academic responsibility in the relationship between family-related factors and students' perceptions of teachers' conscious discipline variables on the one hand and students' academic achievement on the other.

1.4. Research Questions

1. Are there statistically significant relationships among family-related variables (parenting style and parental behavior), students' perceptions of teachers' conscious discipline variables (empathy, encouragement, positive intent, and composure), students' intrapersonal factors (academic motivation and academic responsibility), and students' academic achievement?

2. Do family-related variables, students' perceptions of teachers' conscious discipline, and students' intrapersonal factors independently affect students' academic achievement?
3. Do students' intrapersonal factors, specifically academic motivation and responsibility, mediate the relationships among family-related factors, students' perceptions of teachers' conscious discipline, and students' academic achievement?

1.5. Significance of the Study

1.5.1. Practical Contributions

This study can provide families, teachers, and school leaders with empirical evidence on the mechanisms linking family and school factors to students' academic achievement, thereby supporting more targeted, informed interventions. Specifically, the findings can help parents better understand how their children's perceptions of parenting styles and practices relate to academic motivation and responsibility. These insights may guide parent education programs and family–school partnership initiatives to foster more supportive home environments.

Similarly, the results can inform teachers and school leaders about the importance of students' perceptions of teachers' conscious discipline practices, particularly empathy, encouragement, composure, and positive intent, for student motivation and achievement. These insights may inform the design of professional development programs, the improvement of classroom climate, and the strengthening of teacher evaluation systems that emphasize socio-emotional support.

Additionally, the study provides school directors and administrators with evidence on how family-related factors and the school environment jointly relate to student success. This knowledge

can inform the development of more integrated family–school partnership strategies and targeted efforts to improve student achievement.

Importantly, the findings may also benefit students by raising their awareness of the critical roles that academic motivation and responsibility play in their academic achievement. By identifying these factors as key mechanisms linking family and school experiences to achievement, the study can help students recognize the value of setting academic goals, persisting through challenges, managing their time effectively, monitoring their learning progress, and taking greater ownership of their educational responsibilities. Such awareness may encourage students to adopt more self-regulated learning behaviors, strengthen their intrinsic motivation, and actively engage in practices that enhance their academic achievement.

1.5.2. Theoretical Contributions

This study makes several theoretical contributions by refining and extending frameworks that explain how family and school factors relate to academic achievement. First, it advances the theoretical understanding of Conscious Discipline by examining its applicability beyond early childhood and elementary settings. Existing formulations of Conscious Discipline (Bailey, 2015) were primarily developed and validated in early childhood and elementary contexts, with limited theoretical articulation of how its core principles (empathy, composure, encouragement, and positive intent) operate during adolescence or in non-Western educational systems. By testing whether students' perceptions of teachers' Conscious Discipline influence academic achievement through motivational and responsibility-related mechanisms among Ethiopian secondary school students, the study clarifies the framework's developmental and cultural boundary conditions and contributes to its theoretical generalization.

Second, the study refines theoretical models of parental influence on academic achievement. Prior models have often treated parenting style and specific parental behaviors as overlapping or interchangeable constructs, or have examined their effects primarily as direct predictors of achievement. What remains under-specified is whether these two dimensions operate through distinct intrapersonal pathways (e.g., academic motivation and responsibility) and whether they differ in the relative strength of their direct versus mediated effects. By modeling parenting style and parental behavioral practices as related but distinct constructs and by testing their differential direct and indirect associations with achievement, the study provides greater conceptual clarity on the mechanisms through which family influences operate, an area that existing theoretical models have not adequately differentiated.

Third, and most critically, the study clarifies the relative importance of academic motivation and academic responsibility as mechanisms that translate environmental influences into achievement. It also investigates whether family and school factors differentially affect these two intrapersonal factors. This study addresses a fundamental gap in understanding whether environmental influences operate through uniform psychological pathways or whether different contexts cultivate distinct psychological resources. Such understanding is theoretically important because it elucidates the psychological mechanisms of socialization and academically significant because it suggests that effective support requires identifying which environmental factors most powerfully develop specific intrapersonal resources.

Fourth, by examining the relationships among family-related factors, students' perceptions of teachers' conscious discipline, academic motivation, academic responsibility, and academic achievement in the Ethiopian context, this study may contribute to understanding the cross-cultural applicability of developmental theories that have been predominantly developed and tested in

Western settings. The findings may provide evidence on the extent to which theoretical propositions derived from Self-Determination Theory, Ecological Systems Theory, and Social Cognitive Theory apply to secondary school students in a non-Western cultural context.

1.6. Delimitations of the Study

1.6.1. Geographical and Population Delimitation

The study focused on Grade 9 and Grade 10 students enrolled in selected public secondary schools in Debre Markos Town, East Gojjam Zone, Ethiopia. Participants ranged in age from 14 to 21 years. Secondary school students were selected because adolescence is a critical developmental period when academic motivation, academic responsibility, and self-regulatory capacities become increasingly important determinants of academic achievement (Opdenakker, 2022). During this stage, students are expected to assume greater ownership of their learning while navigating significant cognitive, social, and emotional transitions. According to Self-Determination Theory, adolescents experience heightened needs for autonomy, competence, and relatedness, making them particularly sensitive to the influences of family and school environments (Ryan & Deci, 2020). Similarly, Ecological Systems Theory emphasizes that interactions between family and school contexts become increasingly important in shaping developmental and educational outcomes during adolescence (Bronfenbrenner, 1979).

Focusing on Grades 9 and 10 was particularly appropriate because these students are at the entry stage of secondary education and are adjusting to higher academic expectations, greater learning autonomy, and more demanding educational responsibilities. This transitional period often requires students to develop stronger motivational orientations, effective study habits, and greater responsibility for their academic achievement. Research shows that academic motivation

frequently declines during adolescence, while personal responsibility and self-regulated learning become increasingly important predictors of academic achievement (Wigfield et al., 2006). Consequently, motivation and responsibility developed during the early years of secondary education may have lasting implications for students' subsequent academic success, school completion, and educational transitions. Furthermore, although adolescents seek greater independence, parenting practices, parental involvement, and teacher-student relationships continue to exert substantial influence on their motivation, responsibility, and achievement. Therefore, secondary school students, particularly those in Grades 9 and 10, provide an appropriate population for examining how parenting style, parental behavior, and teachers' conscious discipline contribute to academic achievement through the mediating roles of academic motivation and academic responsibility.

Debre Markos Town was selected as the study area based on practical and contextual considerations. Given budget and time constraints, conducting the study in a geographically accessible location was necessary. The researcher resides in the study area and is familiar with the local language, culture, social norms, values, and educational context, which facilitated effective communication with participants, enhanced access to schools, and supported efficient data collection. In addition, the researcher's prior academic and professional experiences within the community provided valuable contextual insights into the local school environment and student experiences. These factors contributed to a more informed understanding of the study setting and facilitated the implementation of the research procedures.

1.6.2. Conceptual Delimitation

Conceptually, the study focused on selected environmental and intrapersonal factors associated with academic achievement. Among family-related factors, the study examined

parenting style and parental behavior. Although other family characteristics, such as socioeconomic status, family structure, parental education, and household resources, have been shown to influence academic achievement, the study focused on parenting style and parental behavior because they represent proximal, modifiable mechanisms through which parents directly influence students' learning and development (Elliott et al., 2000).

Regarding school-related influences, the study focused on teachers' conscious discipline, specifically empathy, encouragement, composure, and positive intent. Although teacher effectiveness encompasses additional dimensions, including subject-matter expertise, instructional practices, classroom management, and assessment competence, conscious discipline was selected because it represents an important socio-emotional aspect of teacher-student interactions that has received limited attention in educational research, particularly in Ethiopian secondary school settings. Furthermore, these dimensions address students' psychological needs for relatedness and competence and constitute teachable competencies that can be enhanced through professional development (Ryan & Deci, 2018).

The study also examined academic motivation and academic responsibility as the primary intrapersonal mechanisms linking environmental influences to academic achievement. Although other student characteristics, such as academic self-efficacy, self-concept, resilience, emotional intelligence, and learning strategies, are associated with academic achievement, academic motivation and academic responsibility were selected for their theoretical relevance within Self-Determination Theory and Social Cognitive Theory, as well as their practical importance for sustainable academic engagement and achievement. This focus is particularly relevant in the Ethiopian context, where previous studies have reported that many students exhibit predominantly controlled rather than autonomous motivation.

1.7. Operational Definition of the Key Terms

Academic achievement: In this study, academic achievement is defined as the average score a student earned across all subjects in the first semester, as recorded in the official school academic records.

Academic motivation encompasses the internal and external forces that energize and direct learning behaviors. It is measured with the 28-item Academic Motivation Scale developed by Vallerand et al. (1992). Participants respond on a 5-point Likert scale (1 = Does not correspond at all; 5 = Corresponds exactly), and higher total scores indicate greater intrinsic motivation and more autonomous engagement in learning.

Academic responsibility reflects students' sense of ownership, accountability, and self-direction in learning. It is measured using the 24-item School Learning Responsibility Scale (Yeşil, 2013), which employs a 5-point Likert scale. Higher scores indicate greater student accountability, persistence, and engagement in learning-related tasks.

Composure: Teachers' ability to remain emotionally self-regulated and demonstrate emotional stability during classroom interactions and in response to student challenges. This is measured by the mean score on a six-item, researcher-developed scale using a 5-point Likert scale (1 = Strongly Disagree; 5 = Strongly Agree), with higher scores indicating greater perceived emotional stability and self-regulation.

Empathy: Teachers' ability to understand and respond to students' emotional states and academic **c**hallenges, measured by the average score on a four-item, researcher-developed scale rated on a 5-point Likert scale (1 = Strongly Disagree; 5 = Strongly Agree). Higher scores indicate a greater perceived capacity to understand students' feelings and perspectives.

Encouragement: Teachers' communication of confidence in students' academic potential, along with specific affirmation of student effort and growth. It is measured as the mean score on a four-item, researcher-developed scale using a five-point Likert scale, with higher scores indicating more frequent supportive and affirming feedback.

Family-related factors: Environmental influences within the family context that affect students' academic achievement. In this study, they are operationalized as parenting style and parental behavior.

Intrapersonal factors: Internal, student-centered psychological characteristics and processes, including academic motivation (measured by the Academic Motivation Scale) and academic responsibility (measured by the School Learning Responsibility Scale), that directly influence learning behaviors and achievement.

Mediator variables: Variables that explain the mechanism or process through which independent variables influence dependent variables. In this study, academic motivation and academic responsibility are treated as mediator variables.

Parental behavior refers to specific, observable actions that support children's education and development. These actions include supervising and assisting with homework, establishing consistent study routines, providing direct academic support, maintaining regular communication with teachers, and providing learning resources.

Parenting style refers to the overall emotional and structural climate of parent-child relationships. It reflects the general pattern of how parents respond to their children, varying in warmth**,** responsiveness, demandingness, and structure. Parenting styles are typically categorized as authoritative, authoritarian, permissive, or uninvolved.

Positive Intent: Teachers' framing of classroom expectations, corrections, and discipline as supportive guidance rather than as punishment or control, measured by the mean score on a 3-item researcher-developed scale using a 5-point Likert scale.

Teachers' Conscious Discipline is a comprehensive relational and social-emotional approach that integrates teachers' empathy, encouragement, composure, and positive intent in classroom interactions. It is measured using a 17-item self-developed scale based on Bailey's (2014) framework, rated on a 5-point Likert scale.

Chapter Two: Review of Related Literature

This chapter presents a comprehensive review of the theoretical and empirical literature on the study's principal variables, namely students' perceptions of teachers' conscious discipline, parenting style, parental behavior, academic motivation, academic responsibility, and academic achievement. Researchers have extensively examined these constructs, both independently and in various combinations, particularly in relation to academic achievement. The literature review critically evaluates existing scholarly contributions, synthesizes prevailing theoretical perspectives, and analyzes documented relationships among these interrelated variables.

Therefore, the review of related literature comprises four major sections. The first section outlines the theoretical foundations for students' perceptions of teachers' conscious discipline, parenting style, parental behavior, academic motivation, and academic responsibility. The second section presents an empirical review of studies examining relationships among these variables, with particular attention to their associations with academic achievement. The third section offers a synthesized summary of the reviewed literature, highlighting key findings and identifying research gaps. Finally, the fourth section outlines the conceptual framework guiding the present study and demonstrates the proposed associations among the variables under investigation.

2.1. Theoretical Literature Review

2.1.1. Concepts and Theories of Teachers' Conscious Discipline

As articulated by Bailey (2015), Conscious Discipline is a comprehensive, multidisciplinary self-regulation program that integrates social-emotional learning, school culture, and discipline practices into a unified framework grounded in brain research. It shifts the focus of school discipline from external controls, such as rewards and punishments, to the cultivation of

internal resources, including safety, connection, and problem-solving capacities. According to Bailey (2015), behavior is primarily driven by individuals' internal emotional states; therefore, sustainable behavioral and academic improvement begins with strengthening teachers' emotional intelligence before expecting change in students. This perspective aligns with contemporary models of teacher socio-emotional competence, which conceptualize effective teaching as an integration of emotional regulation, relational awareness, and reflective practice (Savina et al., 2025). Within this framework, students' perceptions of teachers' conscious discipline reflect their teachers' capacity to model self-regulation, emotional awareness, and constructive problem-solving during instructional interactions.

Empathy, encouragement, composure, and positive intent operationalize the philosophy of conscious discipline in daily teacher–student interactions. Empathy enables teachers to acknowledge students' emotions and respond in ways that foster psychological safety and relational trust. Encouragement strengthens students' sense of competence and belonging, supporting intrinsic motivation and resilience. Composure reflects teachers' ability to regulate their emotional responses under stress, modeling adaptive self-regulation for students. Positive intent involves interpreting students' misbehavior as communication of unmet needs rather than deliberate disobedience, thereby promoting restorative rather than punitive responses. Empirical research indicates that teachers' socio-emotional competence significantly predicts the quality of teacher–student relationships and student engagement (Gebre et al., 2025; Polydoros et al., 2025). Thus, integrating Bailey's (2015) definition with contemporary socio-emotional theories suggests that students' perceptions of teachers' conscious discipline constitute a relational, neuropsychologically informed approach to classroom management, in which emotionally

intelligent teaching practices cultivate supportive climates conducive to academic motivation and achievement.

2.1.2. Theoretical Foundations of Teachers' Conscious Discipline

Multiple complementary psychological and educational frameworks ground Teachers' Conscious Discipline, explaining how emotionally attuned, relationship-centered teaching enhances students' behavioral regulation and academic engagement. One of the strongest foundations is Social–Emotional Learning (SEL) theory, particularly as articulated by the Collaborative for Academic, Social, and Emotional Learning (CASEL, 2020). SEL theory holds that effective education must intentionally cultivate five core strengths: self-awareness, self-management, social awareness, relationship skills, and responsible decision-making. These competencies are central to both academic success and long-term well-being (Mahoney et al., 2018). Teachers' Conscious Discipline operationalizes SEL principles by emphasizing teachers' emotional regulation (composure), empathy, and positive relational communication as foundational classroom practices. Empirical evidence indicates that teachers' socio-emotional competence predicts classroom emotional climate, student engagement, and academic outcomes (Jennings et al., 2017; Schonert-Reichl, 2017). Thus, SEL theory provides the conceptual infrastructure for understanding Conscious Discipline as a teacher-focused approach to cultivating emotionally supportive learning environments.

A second foundational perspective is Attachment Theory, originally developed by Bowlby (1982) and later applied to educational contexts. Attachment Theory holds that children's emotional security in close relationships shapes their capacity for exploration, emotional regulation, and cognitive development. In school settings, teachers often serve as secondary attachment figures, and their sensitivity, warmth, and consistency influence students' adjustment

and engagement (Bergin & Bergin, 2014). Empirical studies confirm that positive teacher–student relationships are significantly associated with higher academic engagement and achievement (Roorda et al., 2017). Teachers' Conscious Discipline reflects attachment-informed practice by prioritizing emotional safety, connection, and agreed-upon responses to student behavior. Core elements such as empathy and positive intent align with the "secure base" concept, in which teachers interpret student misbehavior as communication of unmet needs rather than as intentional disobedience.

Self-Determination Theory (SDT) (Deci & Ryan, 2000; Ryan & Deci, 2020) strongly supports Teachers' Conscious Discipline. SDT holds that optimal motivation and psychological growth occur when three basic psychological needs are met: autonomy, competence, and relatedness. Conscious Discipline supports relatedness through empathic teacher–student relationships, competence through encouragement and strengths-based feedback, and autonomy through collaborative problem-solving rather than punitive control. Research shows that autonomy-supportive, emotionally responsive teaching enhances intrinsic motivation, persistence, and academic performance (Reeve & Cheon, 2021). From an SDT perspective, Teachers' Conscious Discipline is a need-supportive classroom approach that shifts discipline from external control to relational guidance, thereby fostering internal motivation.

Finally, Teachers' Conscious Discipline aligns with contemporary relational classroom management and restorative discipline models, which argue that sustainable behavioral change stems from relationship quality rather than coercive practices. Relational approaches emphasize proactive climate building, emotional coaching, and restorative dialogue (Gregory et al., 2016). Research indicates that emotionally supportive classroom management significantly reduces behavioral problems and increases engagement and academic success (Hamre et al., 2013). Unlike

traditional behaviorist discipline models centered on rewards and punishments, relational discipline frameworks prioritize co-regulation, empathy, and shared responsibility, principles that align directly with the core components of Teachers' Conscious Discipline, namely composure, encouragement, empathy, and positive intent. Collectively, these theoretical foundations position Conscious Discipline as an integrative model grounded in SEL theory, attachment security, motivational psychology, and relational classroom management.

2.1.3. Concept and Dimensions of Parenting Style

Parenting style refers to the relatively stable constellation of parental attitudes, emotional climate, and behavioral strategies that characterize child-rearing and socialization (Darling & Steinberg, 1993; Smetana, 2017). Unlike specific parenting practices, parenting style reflects the broader relational context in which parental behaviors are expressed and interpreted by children (Darling & Steinberg, 1993). Contemporary scholarship conceptualizes parenting style along two core dimensions, responsiveness (warmth, support, acceptance) and demandingness (control, supervision, expectations), which jointly influence children's socio-emotional and academic development (Pinquart, 2016; Smetana, 2017). Responsiveness fosters emotional security, self-esteem, and internalization of parental values, whereas demandingness promotes behavioral regulation, responsibility, and goal-directed behavior (Pinquart, 2016). Empirical meta-analytic evidence shows that parenting styles are significantly associated with adolescents' academic motivation, psychosocial adjustment, and academic achievement across developmental stages (Pinquart, 2016; Pinquart & Kauser, 2018). Thus, parenting style is a foundational environmental factor shaping students' intrapersonal development and school performance.

Baumrind (1967, 1971) developed the most influential typology of parenting styles, identifying three primary styles: authoritative, authoritarian, and permissive. Maccoby and Martin

(1983) later expanded this framework to include a fourth style, uninvolved. Authoritative parenting, characterized by high responsiveness and high demandingness, combines warmth with clear standards and open communication. It has consistently been linked to higher academic achievement, stronger self-regulation, and better socio-emotional adjustment (Pinquart & Kauser, 2018; Smetana, 2017). Authoritarian parenting, marked by high control and low warmth, emphasizes obedience and strict discipline and is often associated with lower intrinsic motivation and weaker social competence, particularly in Western samples (Pinquart, 2016). Permissive parenting, defined by high warmth and low behavioral control, tends to predict weaker academic discipline and inconsistent achievement outcomes (Pinquart & Kauser, 2018). Finally, uninvolved parenting, characterized by low responsiveness and low demandingness, has been associated with the poorest developmental and academic outcomes, including low engagement and increased behavioral difficulties (Pinquart, 2016). These four typologies remain central to developmental and educational research and provide a structural framework for examining family influences on students' academic motivation and responsibility.

Recent scholarship emphasizes that the meaning and developmental consequences of parenting styles are culturally embedded (Lansford et al., 2018; Pinquart & Kauser, 2018). Although authoritative parenting is widely linked to optimal academic and psychosocial outcomes in Western societies, cross-cultural research suggests that higher parental control may not uniformly predict negative outcomes in collectivist cultural contexts (Lansford et al., 2018). In some societies, strict parental monitoring and behavioral expectations may be interpreted as expressions of care and investment rather than hostility, thereby altering their impact on children's adjustment (Smetana, 2017). Meta-analytic findings further indicate that cultural norms moderate associations between authoritarian parenting and academic achievement, with weaker negative

effects observed in non-Western cultural settings (Pinquart & Kauser, 2018). Consequently, contemporary researchers advocate culturally sensitive interpretations of parenting dimensions rather than universal generalizations (Lansford et al., 2018).

In educational psychology, parenting style is increasingly recognized as an ecological determinant of students' academic motivation and responsibility (Pinquart, 2016). Authoritative parenting, by balancing warmth and structure, supports the development of autonomy, competence, and relatedness, the basic psychological needs identified in Self-Determination Theory (Ryan & Deci, 2020). By contrast, authoritarian and uninvolved parenting may undermine autonomy and relatedness, thereby weakening intrinsic academic motivation (Ryan & Deci, 2020). Overall, parenting style is a multidimensional, culturally contextualized construct that significantly shapes students' socio-emotional functioning and academic achievement trajectories (Pinquart & Kauser, 2018; Smetana, 2017).

2.1.4. Theoretical Perspectives on Parenting Style

Parenting style has been grounded in multidimensional frameworks that explain how parental behaviors shape children's socio-emotional, cognitive, and academic development. A foundational expansion of Baumrind's typology was proposed by Maccoby and Martin (1983), who conceptualized parenting style along two orthogonal dimensions: responsiveness (warmth, support) and demandingness (control, expectations). Their framework systematized parenting into four categories: authoritative, authoritarian, permissive, and neglectful (uninvolved), based on combinations of these dimensions. Contemporary research continues to affirm this dimensional model as theoretically robust and empirically predictive of children's academic and psychosocial outcomes (Pinquart, 2016). Thus, Maccoby and Martin's framework provides the structural and

dimensional basis for understanding how patterns of parental warmth and control influence children's academic responsibility and engagement.

Beyond typological classifications, parenting style must be interpreted within broader contextual systems, as emphasized by Bronfenbrenner's Ecological Systems Theory (1979). This theory holds that child development unfolds within nested environmental systems, including the microsystem (family, school), mesosystem (interactions between family and school), exosystem (parental workplace), and macrosystem (cultural values and norms). Parenting style operates primarily within the microsystem but is shaped by influences from broader ecological layers (Bronfenbrenner & Morris, 2006). Empirical studies show that socioeconomic status, cultural norms, and school–family partnerships moderate the effects of parenting behaviors on academic outcomes (Lansford et al., 2018). From an ecological perspective, parenting style cannot be understood in isolation; rather, it interacts dynamically with school environments and cultural expectations. This framework is particularly relevant to family-related variables and teacher-related influences, as it underscores the interconnectedness of parenting style and classroom climate in shaping students' academic achievement.

Parenting style is also informed by Social Learning Theory (Bandura, 1977), which emphasizes observational learning, modeling, and reinforcement. According to this perspective, children acquire behavioral patterns, emotional responses, and self-regulation skills by observing and imitating parental behavior. Authoritative parents, for example, model problem-solving, emotional regulation, and respectful communication, which children internalize and replicate in academic contexts. Contemporary research supports the proposition that parental modeling significantly predicts children's self-regulated learning and academic persistence (Yamamoto & Holloway, 2010). Moreover, parental reinforcement strategies influence children's motivational

orientations and achievement-related beliefs (Pinquart & Kauser, 2018). Social learning mechanisms therefore explain how parenting styles translate into students' behavioral regulation and academic responsibility through modeling and reinforcement.

Finally, Family Systems Theory offers a holistic lens for understanding parenting style within a dynamic, interdependent family structure. Rooted in Bowen's (1978) work, the theory holds that family members are emotionally interconnected and that parenting behaviors cannot be separated from broader family dynamics, including communication patterns, boundaries, and role distributions. Parenting styles emerge from ongoing interactions among family members rather than from isolated parental traits. Family systems research indicates that family cohesion, adaptability, and conflict resolution patterns significantly influence adolescents' academic adjustment and emotional well-being (Cox & Paley, 1997). From this perspective, authoritative parenting may reflect balanced family boundaries and effective communication systems, whereas neglectful or authoritarian patterns may be associated with rigid or disengaged family structures. Family Systems Theory thus extends the concept of parenting style beyond individual parent behaviors to encompass systemic relational patterns that shape children's academic motivation and psychosocial development.

In synthesis, theoretical perspectives on parenting style converge across dimensional (Maccoby & Martin), ecological (Bronfenbrenner), social-cognitive (Bandura), and systemic (Bowen) frameworks. Together, these theories provide a comprehensive explanatory model that portrays parenting style as multidimensional, contextually embedded, learned through modeling, and dynamically structured within family systems. This theoretical integration strengthens the conceptual foundation for examining how parenting styles predict students' academic motivation, responsibility, and achievement within broader educational and sociocultural contexts.

2.1.5. Concepts and Dimensions of Parental Behavior

Parental behavior encompasses the observable patterns of interaction, emotional expression, supervision, and engagement that parents display in their daily relationships with their children. Unlike parenting styles, which reflect a broader emotional climate, parental behaviors are specific actions and relational practices that directly influence children's socio-emotional development and academic adjustment (Smetana, 2017). Contemporary developmental research conceptualizes parental behavior along several core dimensions, particularly parental warmth, parental control, communication, and parental involvement in schooling, each of which plays a critical role in shaping children's motivation, responsibility, and academic performance (Pinquart, 2016). These dimensions are interrelated yet methodologically distinct, allowing researchers to examine how specific parental practices predict developmental outcomes.

2.1.5.1 Parental Warmth

Parental warmth encompasses expressions of affection, acceptance, emotional support, and responsiveness toward a child. It reflects parents' sensitivity to children's needs and their capacity to provide a secure emotional base. Empirical evidence consistently shows that parental warmth predicts higher self-esteem, stronger emotional regulation, and greater academic engagement (Pinquart, 2016). Warm parenting fosters psychological safety, encouraging children to explore, take academic risks, and persist at challenging tasks. Cross-cultural research further confirms that parental warmth is universally linked to positive developmental outcomes, even though its expression may vary across cultural contexts (Lansford et al., 2018). From a motivational perspective, warmth satisfies children's need for relatedness, a core component of Self-Determination Theory, thereby enhancing intrinsic academic motivation (Ryan & Deci, 2020).

Thus, parental warmth is a foundational protective factor that supports both socio-emotional well-being and academic achievement.

2.1.5.2 Parental Control

Parental control refers to parents' efforts to regulate and guide children's behavior through monitoring, rule-setting, and disciplinary strategies. Contemporary literature distinguishes between behavioral control (e.g., supervision, consistent rules) and psychological control (e.g., guilt induction, withdrawal of love), as these forms have markedly different developmental implications (Pinquart, 2016). Behavioral control, when paired with warmth, is generally associated with better academic performance and stronger self-discipline because it promotes structure and responsibility (Pinquart & Kauser, 2018). In contrast, psychological control is linked to anxiety, lower autonomy, and reduced intrinsic motivation. Studies suggest that moderate, consistent behavioral control supports adolescents' academic regulation, whereas excessive or coercive control undermines academic engagement (Smetana, 2017). Therefore, we must interpret parental control by its type and relational context, rather than as a uniformly positive or negative construct.

2.1.5.3 Parent–Child Communication

Parent–child communication encompasses the quality, openness, and frequency of verbal and emotional exchanges between parents and children. Active listening, mutual respect, and constructive dialogue define effective communication. Research indicates that open communication enhances adolescents' academic self-concept, problem-solving abilities, and emotional adjustment (Cox & Paley, 1997). Through communication, parents convey expectations, values, and coping strategies that influence children's achievement orientations.

Social learning perspectives suggest that children internalize family communication patterns, which in turn shape their interactions with teachers and peers (Bandura, 1977). Furthermore, researchers have shown that positive parent-child communication strengthens academic persistence by clarifying expectations and reinforcing achievement goals (Yamamoto & Holloway, 2010). Consequently, communication serves as a relational mechanism through which warmth and control are expressed and interpreted.

2.1.5.4 Parental Involvement in Schooling

Parental involvement in schooling refers to parents' active participation in their children's educational experiences, including monitoring homework, attending school meetings, communicating with teachers, and supporting academic activities at home. Research grounded in ecological systems theory emphasizes that parental involvement strengthens the mesosystem connection between family and school, thereby enhancing academic outcomes (Lansford et al., 2018). Meta-analytic findings indicate that parental involvement is positively associated with students' academic achievement, particularly when it includes high expectations and supportive engagement rather than intrusive supervision (Yamamoto & Holloway, 2010). Importantly, the effectiveness of involvement depends on its quality; autonomy-supportive involvement fosters competence and intrinsic motivation, whereas controlling involvement may generate pressure and anxiety (Ryan & Deci, 2020). Thus, parental involvement serves as a direct pathway linking family processes to students' academic responsibility and performance.

Collectively, the dimensions of parental warmth, behavioral control, communication, and involvement in schooling provide a multidimensional framework for understanding parental behavior. Warmth nurtures emotional security; behavioral control promotes discipline and responsibility; communication facilitates the transmission of values and strengthens relational

cohesion; and involvement connects home and school contexts. Contemporary empirical research consistently shows that a balanced integration of warmth and structured behavioral guidance predicts the most adaptive academic and socio-emotional outcomes (Pinquart & Kauser, 2018; Smetana, 2017). Therefore, we should conceptualize parental behavior as a dynamic pattern of relational practices that interact to shape students' academic motivation, self-regulation, and achievement.

2.1.6. Theoretical Models of Parental Behavior

2.1.6.1. Parental Acceptance–Rejection Theory

While Baumrind focuses on control, Rohner's Interpersonal Acceptance-Rejection Theory (IPAR Theory) focuses on the emotional bond. This evidence-based theory posits that the human need for positive responses from significant others is a biological necessity. Rohner and Khaleque (2010) demonstrated, through extensive meta-analysis, that perceived parental rejection is consistently linked to psychological maladjustment across cultures, including low self-esteem and emotional instability. IPAR Theory is unique because it accounts for the "coping" mechanism, explaining why some individuals remain psychologically well-adjusted despite significant rejection (Rohner, 2004).

2.1.6.2. Parental Involvement Models: The Psychological "Why"

Moving into the educational sphere, the Hoover-Dempsey and Sandler Model offers a psychological framework for understanding why parents choose to engage in their child's schooling. Unlike earlier models that focused on demographic variables (such as SES), Hoover-Dempsey and Sandler (1997) argued that involvement is driven by a parent's "role construction," the belief that they are supposed to be involved, and their sense of "self-efficacy," the belief that

their involvement will help the child. Later researchers revised this model to emphasize that the school and the child each provide critical "invitations" that catalyze parental action (Walker et al., 2005).

2.1.6.3. Family Engagement Frameworks

Joyce Epstein's Theory of Overlapping Spheres of Influence shifts the unit of analysis from the individual parent to the partnership among institutions. Epstein (2018) argues that a child's development is best supported when the "spheres" of family, school, and community overlap. Six types of engagement operationalize this framework: parenting, communicating, volunteering, learning at home, decision-making, and collaborating with the community. This holistic view shifts the narrative from "parental involvement" (which can be one-sided) to "family engagement" (which implies a reciprocal, two-way relationship).

2.1.7. Concepts and Theories of Academic Motivation

Academic motivation is the internal process that initiates and sustains goal-directed activities in educational settings. It is not a monolithic trait but a multidimensional construct that captures the "why" behind student behavior. According to Schunk et al. (2014), academic motivation encompasses the cognitive, emotional, and behavioral energy a student invests in learning. It is a critical predictor of academic performance, shaping effort, persistence in the face of difficulty, and the selection of learning strategies.

2.1.7.1. Intrinsic vs extrinsic motivation

The dichotomy between intrinsic and extrinsic motivation remains a cornerstone of educational psychology. Intrinsic motivation involves engaging in a task for its inherent satisfaction, curiosity, or enjoyment (Ryan & Deci, 2020). In contrast, extrinsic motivation

involves performing an activity to attain a separable outcome, such as rewards, grades, or the avoidance of punishment. Recent research suggests that although people traditionally associate intrinsic motivation with deeper learning and better conceptual understanding, students can internalize extrinsic motivators when those motivators align with personal values (Ryan & Deci, 2000).

2.1.7.2 Self-Determination Theory (SDT)

SDT expands the intrinsic-extrinsic spectrum by identifying three universal psychological needs: Autonomy (the desire to be the origin of one's actions), Competence (the need to feel effective), and Relatedness (the need to feel connected to others). Ryan and Deci (2020) argue that when educational environments support these three needs, students demonstrate higher levels of autonomous motivation and psychological well-being. SDT is particularly useful for examining how teacher-student relationships or classroom climates influence students' achievement.

2.1.7.3 Expectancy-Value Theory

Eccles and Wigfield’s Expectancy-Value Theory (EVT) holds that a student's choice, persistence, and performance can be explained by two primary factors: expectations of success and the value assigned to the task. According to Wigfield and Eccles (2000), "value" is further subdivided into attainment value (the importance of doing well), intrinsic value (enjoyment), utility value (the usefulness for future goals), and cost (the negative aspects of engaging in the task). This model is highly effective for investigating why students might "disengage" from specific subjects, such as mathematics or science, as they progress through school.

2.1.7.4 Achievement Goal Theory (AGT)

Achievement Goal Theory focuses on the goals students perceive as guiding their achievement behavior. The theory distinguishes between Mastery Goals (focused on learning, understanding, and self-improvement) and Performance Goals (focused on demonstrating high ability relative to others or avoiding the appearance of incompetence). Elliot and Hulleman (2017) further refined this into the 2x2 framework, distinguishing between "approach" and "avoidance" tendencies. Mastery-approach goals are linked to high interest and deep processing, whereas performance-avoidance goals are often associated with high anxiety and lower achievement.

2.1.8. Concepts and Theories of Academic Responsibility

Academic responsibility is students' capacity and willingness to take ownership of their learning behaviors, fulfill academic obligations, regulate their efforts, and accept accountability for academic outcomes. It encompasses behaviors such as completing assignments on time, preparing for examinations, persisting through challenging tasks, and adhering to classroom norms without external enforcement (Zimmerman, 2015). Conceptually, academic responsibility integrates motivational, cognitive, and behavioral components, reflecting both self-regulatory competence and a moral commitment to learning goals. Contemporary educational psychology views academic responsibility not merely as compliance with rules but as a developmental outcome rooted in internalized values and autonomous self-management (Ryan & Deci, 2020). According to Lauermann and Karabenick (2013), responsibility is distinct from mere "compliance"; it involves a subjective sense of duty and accountability.

2.1.8.1. Self-Regulation Theory (SRL)

Self-regulation is the process by which students translate their mental abilities into academic skills. Barry Zimmerman's Social Cognitive Model of Self-Regulation holds that students exercise academic responsibility through a cyclical process: Forethought (goal setting), Performance (self-control), and Self-Reflection (self-judgment). Zimmerman (2000) argues that highly responsible students effectively monitor their progress and adjust their strategies when faced with obstacles. In this view, responsibility is the consistent application of self-regulatory cycles to achieve long-term mastery. Empirical evidence consistently shows that self-regulated learning predicts academic achievement and long-term educational success (Dent & Koenka, 2016). Furthermore, students with stronger self-regulation skills are more likely to complete academic tasks independently and adhere to classroom expectations, indicating that self-regulatory competence forms the behavioral core of academic responsibility.

2.1.8.2 Personal responsibility models

Personal responsibility models suggest that responsibility is a function of a student's internal locus of control. Mergler et al. (2008) developed a framework that identifies three core components of personal responsibility in adolescents: cognitive (understanding choices), behavioral (taking action), and affective (feeling accountable). This model is essential for understanding how students view their role in the classroom, whether as passive recipients of knowledge or as active agents in their own success. Research applying personal responsibility models shows that when students are provided with structured opportunities for choice, reflection, and leadership, they develop stronger academic engagement and accountability (Carreres-Ponsoda et al., 2021). These models suggest that responsibility is not imposed externally but cultivated through supportive relationships and participatory learning environments. Therefore, academic

responsibility reflects not only individual self-control but also socially scaffolded moral development within educational settings.

2.1.8.3. Internalization of discipline

The transition from external discipline (rules imposed by teachers or parents) to internal discipline is best explained by Organismic Integration Theory, a sub-theory of Self-Determination Theory. Ryan and Deci (2000) describe a continuum of internalization in which behaviors progress from external regulation (doing it because of a rule) to integrated regulation (doing it because it is part of one's identity). Academic responsibility is achieved when a student "identifies" with the value of learning, making external discipline unnecessary. Discipline that relies solely on external rewards or punishments fosters controlled regulation, whereas autonomy-supportive environments promote identified and integrated regulation—forms of motivation associated with authentic responsibility. Empirical research shows that autonomy-supportive teaching enhances students' internalization of academic norms and responsibilities, leading to greater persistence and deeper engagement (Reeve, 2016). Thus, academic responsibility emerges when students internalize academic values and perceive learning tasks as personally meaningful rather than as externally imposed obligations.

2.1.8.4 Development of autonomous responsibility

Autonomous responsibility represents the culmination of these theoretical perspectives. It is characterized by self-initiated engagement, intrinsic motivation, and proactive accountability for learning outcomes (Ryan & Deci, 2020). Developmentally, this form of responsibility emerges from supportive parent and teacher relationships that balance structure with autonomy support (Zimmerman, 2015). Research indicates that students who perceive higher levels of autonomy

support demonstrate stronger academic self-discipline and resilience (Dent & Koenka, 2016). According to Grolnick and Ryan (1989), autonomy-supportive rather than controlling parenting fosters students' ability to take responsibility. When students are given choices and a rationale for tasks, they develop a sense of ownership. Moreover, emotionally supportive classroom climates facilitate the transition from externally regulated compliance to internally motivated responsibility (Reeve, 2016). Therefore, autonomous academic responsibility is not an innate trait but a developmental achievement shaped by self-regulatory competence, motivational internalization, and relational support systems.

In summary, academic responsibility is a multidimensional construct grounded in self-regulation theory, personal responsibility models, and the internalization of motivation. It reflects students' ownership of learning behaviors, integration of academic values, and autonomous engagement in educational tasks. These theoretical foundations provide a robust framework for examining how family- and teacher-related variables influence students' development of academic responsibility and their subsequent academic achievement.

2.2. Empirical Literature Review

The preceding section presented the theoretical foundations for perceived teachers' conscious discipline, parent-related variables, academic motivation, academic responsibility, and academic achievement. While these theories offer a conceptual explanation of how emotional, relational, and motivational processes influence students' academic achievement, empirical research is essential to determine how these constructs operate in real-world educational contexts. Theoretical models such as Self-Determination Theory (Ryan & Deci, 2020), Self-Regulation Theory (Zimmerman, 2015), Ecological Systems Theory (Bronfenbrenner & Morris, 2006), and

Social–Emotional Learning frameworks provide explanatory mechanisms; however, empirical studies provide evidence on the strength, direction, and consistency of relationships among these variables across diverse cultural and educational settings.

Accordingly, this section synthesizes empirical findings on the major constructs of the present study. First, research on students' perceptions of teachers' conscious discipline and its association with students' motivation, responsibility, and academic achievement is reviewed. Second, empirical evidence on family-related variables, including parenting style and parental behavior, is discussed, with particular attention to their influence on academic motivation and achievement. Third, studies examining academic motivation as a predictor of academic responsibility and achievement are reviewed. Finally, empirical research linking academic responsibility to academic achievement is presented. By organizing the review around these major variables and their interrelationships, this section establishes the empirical basis for the proposed conceptual framework and identifies gaps that justify the present study.

2.2.1. The Relationship between Teachers' Conscious Discipline and Academic Motivation

Students' academic motivation is strongly shaped by the quality of the classroom's emotional climate and teacher–student interactions. Contemporary research grounded in social–emotional learning and motivational theories suggests that teachers' emotional regulation, empathy, encouragement, and autonomy-supportive behaviors significantly influence students' intrinsic motivation (Ryan & Deci, 2020). Perceived teachers' conscious discipline, conceptualized as students' perceptions of teachers' empathy, composure, positive intent, and relational guidance, aligns closely with autonomy-supportive and emotionally responsive teaching practices. Empirical studies conducted in Western contexts consistently demonstrate that emotionally supportive teaching enhances students' intrinsic motivation, engagement, and

academic persistence (Reeve, 2016). For instance, Reeve (2016) found that autonomy-supportive instructional behaviors, including perspective-taking and constructive feedback, significantly predicted students' self-determined motivation. Similarly, Jennings et al. (2017) reported that teachers' social–emotional competence was associated with improved classroom climate and higher student engagement. Globally, several studies have highlighted this positive correlation. For instance, Simonsen et al. (2008) examined how proactive classroom management, akin to the Conscious Discipline model, influences student outcomes. Their findings revealed that students who perceived their teachers as using supportive, social-emotional discipline strategies reported significantly higher levels of intrinsic motivation than those in classrooms governed by traditional, punitive measures. The authors argued that a "school family" environment, a core tenet of conscious discipline, reduces cortisol levels and allows the brain to shift from a survival state to a learning state, thereby boosting academic drive. These findings suggest that when students perceive their teachers as emotionally regulated and supportive, their intrinsic academic motivation increases.

Meta-analytic evidence further strengthens this association. Roorda et al. (2017) examined affective teacher–student relationships across multiple studies and found that higher relational quality was significantly associated with greater academic engagement and motivation. Emotional warmth and sensitivity, core aspects of conscious discipline, were particularly predictive of students' motivational outcomes. Likewise, Wang and Eccles (2012) demonstrated that supportive classroom environments foster students' engagement trajectories during adolescence. These global findings converge on the conclusion that teacher behaviors grounded in emotional intelligence and relational discipline practices significantly enhance academic motivation.

In Asian contexts, similar patterns have been documented. For example, Cheon et al. (2016) found that when teachers adopted autonomy-supportive instructional styles, students reported higher intrinsic motivation and greater classroom engagement. The study further indicated that training teachers to reduce controlling behaviors and increase supportive communication led to measurable improvements in students' motivational outcomes. These findings reinforce the proposition that perceived teacher emotional composure, empathy, and encouragement, central elements of conscious discipline, serve as motivational catalysts across cultural contexts.

In the African context, research has likewise emphasized the role of the teacher-student bond in fostering motivation. Kutsyuruba et al. (2015) examined the relationship between school climate and student persistence. The results indicated that the "connectedness" fostered by conscious-style discipline catalyzes student motivation. Specifically, the researchers found that when teachers replaced coercive control with empathetic limit-setting, students showed a marked increase in their "attainment value" (the importance they placed on doing well in school), consistent with Expectancy-Value Theory.

In the Ethiopian context, although limited research has explicitly examined "conscious discipline" as a construct, several empirical studies have examined related variables, including teacher support, classroom climate, and academic motivation. For example, research among Ethiopian secondary school students found that positive teacher–student relationships and supportive classroom interactions were significantly associated with higher levels of academic engagement and motivation (Dagnew, 2018). Likewise, a study in Haramaya secondary schools reported that students' perceptions of supportive, structured parenting and teaching practices significantly predicted academic achievement motivation (Mihret et al., 2019). These findings

suggest that Ethiopian students who perceive their teachers as emotionally supportive and respectful are more likely to develop stronger academic motivation.

Further evidence from Ethiopian secondary schools indicates that perceived teacher support is positively associated with intrinsic motivation and academic persistence, particularly in classrooms with autonomy-supportive practices rather than authoritarian control (Moges & Muola, 2014). However, studies also report that traditional authoritarian instructional approaches remain prevalent in many Ethiopian classrooms and are negatively associated with students' psychological well-being and academic curiosity (Mihret et al., 2019).

Despite growing empirical support globally and regionally, few studies have directly examined students' perceptions of teachers' conscious discipline as a unified construct in relation to academic motivation, particularly in the Ethiopian educational context. Most prior research has examined teacher support, autonomy support, or emotional competence independently, rather than integrating empathy, composure, encouragement, and positive intent within a single conceptual framework. Furthermore, the mediation pathways linking perceived teachers' conscious discipline to academic achievement through academic motivation remain underexplored. Therefore, these empirical gaps highlight the need for further investigation into how students' perceptions of teachers' conscious discipline influence their academic motivation and, subsequently, their academic outcomes in Ethiopian secondary schools.

2.2.2. The Relationship between Teachers' Conscious Discipline and Academic Responsibility

Teachers' conscious discipline, characterized by empathy, encouragement, positive intent, and composure, has increasingly been examined in the broader literature on social–emotional

learning (SEL) and classroom climate. Although the term “conscious discipline” originates with Bailey (2015), empirical studies often examine similar constructs under labels such as emotionally supportive teaching, autonomy-supportive instruction, and teacher–student relationship quality. Across global contexts, research consistently shows that emotionally responsive and structured classroom environments foster students’ sense of responsibility for their learning.

International evidence indicates that teachers’ emotionally supportive practices promote students’ internalization of behavioral norms and academic obligations. For example, Roorda et al. (2011), in a meta-analysis of teacher–student relationships and student engagement, found that positive teacher–student relationships significantly predicted greater engagement and task responsibility, particularly among elementary and secondary school students. Similarly, Pianta et al. (2012) showed that emotionally supportive classroom interactions predicted students’ academic self-regulation and responsible classroom behavior across grade levels. These findings align with Self-Determination Theory (Ryan & Deci, 2020), which holds that supportive relationships satisfy students’ psychological needs for autonomy, competence, and relatedness, thereby fostering internalized responsibility.

Empirical studies grounded in autonomy-supportive teaching further underscore the link between conscious discipline–like practices and academic responsibility. Reeve (2012) reported that when teachers adopt autonomy-supportive strategies, such as perspective-taking, encouragement, and non-controlling language, students demonstrate greater self-regulation and accountability for academic tasks. Likewise, Jang et al. (2016) found that students exposed to autonomy-supportive instruction exhibited higher levels of classroom responsibility, persistence, and academic engagement. These findings suggest that teacher composure and positive intent,

central elements of conscious discipline, foster students' willingness to assume ownership of their learning responsibilities.

Research in Asian contexts likewise supports this relationship. In South Korea, Shin and Ryan (2014) found that perceived teacher autonomy support significantly predicted students' academic responsibility and self-regulation, even after controlling for prior achievement. In China, Wang et al. (2016) showed that teacher emotional support positively influenced students' self-discipline and homework responsibility, and that this effect was mediated by intrinsic motivation. These cross-cultural findings reinforce the universality of emotionally supportive teaching in promoting responsible academic behavior.

Although limited, empirical evidence from African contexts also supports the role of teacher–student relationships in fostering academic responsibility and engagement. For example, research in Nigeria found that positive teacher–student communication and social interaction significantly predict secondary students' academic achievement, indicating that constructive relational behaviors contribute to students' task responsibility and performance outcomes (Obikeze & Ezeanowai, 2025). Similarly, a qualitative study of secondary schools in Zimbabwe demonstrated that democratic student–teacher engagement and teacher support for autonomous learning positively influence learner participation, motivation, and academic progress (Magwa & Mohangi, 2022). These findings suggest that relational and supportive classroom practices in African secondary schools promote greater academic responsibility and achievement.

In the Ethiopian context, emerging studies offer relevant insights. Although direct investigations of "conscious discipline" are scarce, research on teacher support and classroom climate shows comparable effects. For example, Tadesse and Gillies (2015) reported that Ethiopian students who perceived higher levels of teacher support exhibited greater academic

engagement and responsibility in cooperative learning settings. Studies in Addis Ababa secondary schools indicate that perceived teacher fairness and emotional support positively predict students' self-discipline and academic responsibility (Gebre et al., 2025). These findings suggest that teacher behaviors reflecting empathy, composure, and encouragement may cultivate responsible academic conduct among Ethiopian students.

Additionally, a study conducted by Emiru (2024) in the Amhara region examined the relationship between teacher self-efficacy in classroom management and student engagement in learning. The findings showed that students who perceived their teachers as supportive of autonomy (a key behavioral outcome of Conscious Discipline) exhibited significantly higher levels of academic responsibility. Conversely, in classrooms where discipline was perceived as arbitrary or overly restrictive, students tended to engage in "avoidance behaviors" and displayed less ownership of their academic failures.

Furthermore, recent research in Ethiopia has begun to examine the teacher's role as a "socializer" of responsibility. For instance, Shanka and Thuo (2017) examined conflict management and resolution strategies in primary schools in the Wolaita Zone, finding that teacher-led "conflict resolution" sessions, similar to the Conscious Discipline "Time Machine" or "Peace Table" techniques, were positively correlated with participants' sense of duty and integrity. The study also noted that individuals taught to resolve social conflicts through regulation rather than punishment were more responsible in their collaborative habits and interactions.

Despite the growing body of evidence linking teacher support to academic responsibility, several gaps remain. First, most studies conceptualize teacher support broadly and do not explicitly operationalize the specific dimensions of conscious discipline (empathy, encouragement, positive intent, and composure). Second, few studies have examined this relationship within an integrated

framework that includes academic motivation as a potential mediator. Third, empirical investigations in the Ethiopian context remain limited, particularly at the secondary school level and regarding culturally grounded disciplinary practices.

Although global and regional evidence suggests a positive relationship between teachers' emotionally supportive disciplinary approaches and students' academic responsibility, further research is needed to examine this relationship explicitly within the conscious discipline framework. The present study seeks to address these gaps by investigating how students' perceptions of teachers' conscious discipline predict their academic responsibility in the Ethiopian educational context.

2.2.3. The Relationship between Teachers' Conscious Discipline and Academic Achievement

Teachers' implementation of Conscious Discipline, a comprehensive social-emotional learning (SEL) framework, is pivotal to fostering classroom environments that support student development. This program equips educators with core skills, including composure (maintaining emotional calm during challenges), encouragement (providing positive reinforcement to build self-worth), empathy (recognizing and validating emotions), and positive intent (assuming benevolent motivations in behavior). These skills align directly with teachers' socio-emotional characteristics. These traits enable educators to model emotional regulation, build trusting relationships, and create a sense of safety, ultimately influencing student outcomes beyond behavior management (Caldarella et al., 2012; Cooper, 2019; Hill, 2017).

Empirical research shows that when teachers implement Conscious Discipline with high fidelity, it enhances their socio-emotional competencies, leading to improved student executive function (EF) skills, such as self-regulation and problem-solving, which in turn mediate academic

readiness. For instance, in a study of 146 preschool classrooms, teachers' adherence to Conscious Discipline components, including composure, encouragement, empathy, and positive intent, was linked to significant gains in children's EF, which predicted better kindergarten readiness across domains such as language, literacy, math, social foundations, and physical development (Anderson et al., 2022). This mediation suggests that teachers' composed and empathetic responses help students internalize self-regulation, indirectly boosting academic performance by fostering a supportive learning climate.

Similarly, higher teacher fidelity to Conscious Discipline has been linked to gains in children's social awareness and EF skills, though not directly to basic academic abilities in preschool settings (Anderson et al., 2022). In these settings, socio-emotional traits such as encouragement and positive intent help teachers transform discipline moments into teaching opportunities, fostering prosocial behaviors that lay the groundwork for sustained academic engagement. In elementary contexts, Conscious Discipline training has been shown to elevate teachers' self-efficacy, their belief in their ability to manage classroom dynamics effectively, while reducing burnout, as educators report feeling more composed and empathetic when handling student interactions (Cooper, 2019). This improved well-being enables teachers to maintain positive intent and encouragement, which correlates with better student behavioral and academic outcomes through enhanced classroom quality (Hill, 2017).

Educators' perceptions further underscore the program's value in integrating socio-emotional characteristics into daily practice. Early childhood teachers rated Conscious Discipline highly for its social validity, noting that skills such as empathy and composure help manage emotions and build connections, leading to fewer conflicts and greater student focus on learning tasks (Caldarella et al., 2012). In another qualitative study, elementary educators viewed the

program as effective for self-regulation and relationship-building, with traits such as positive intent and encouragement promoting a proactive approach to discipline that supports academic success by minimizing disruptions (Hill, 2017). Additionally, in play-based SEL implementations, teachers using Conscious Discipline reported improved student emotional regulation, attributing this to their own composed and empathetic modeling, which facilitates academic skill-building through engaging activities (Arda Tuncdemir & Berk, 2025).

Despite growing evidence linking teacher socio-emotional support to achievement, research gaps remain. Most studies examine emotional support or teacher–student relationships in general terms, rather than explicitly examining the integrated components of conscious discipline (empathy, encouragement, positive intent, composure) as a unified framework. Moreover, limited research has examined causal pathways linking conscious discipline practices to academic achievement, particularly in non-Western and Ethiopian educational contexts. There is a critical geographical imbalance in existing research; the model of conscious discipline has been validated primarily in Western, high-resource settings, leaving its efficacy in the culturally distinct and resource-constrained environment of Ethiopia largely unexamined.

In conclusion, a growing body of empirical research supports a positive relationship between teachers' socio-emotional characteristics, particularly those aligned with conscious discipline, and students' academic achievement. Teachers who demonstrate empathy, offer encouragement, maintain composure, and act with positive intent create classroom environments that meet students' psychological needs, foster engagement, and enhance academic achievement. However, further research is needed to explicitly model constructs of conscious discipline and their direct and indirect effects on academic success across diverse educational settings.

2.2.4. The Relationship between Parenting Style and Academic Motivation

The direct relationship between parenting style and academic motivation is best understood through the lens of Self-Determination Theory (SDT). According to Ryan and Deci (2020), students require autonomy support, competence, and relatedness to develop intrinsic motivation. The Authoritative parenting style, characterized by high responsiveness and high demandingness, directly supports these needs. Authoritative parents provide a "scaffolding" environment in which expectations are clear and the child's autonomy is respected.

Empirical evidence consistently supports this direct link. For instance, Darling and Steinberg (1993) demonstrated that parenting style creates a "contextual effect" that increases a student's openness to parental influence. In authoritative homes, students are more likely to internalize the value of education, which leads to higher intrinsic motivation. Conversely, authoritarian parenting (high control, low warmth) is often associated with extrinsic motivation and academic anxiety, as students perform to avoid punishment rather than for personal growth. Permissive parenting, while warm, often lacks the "demandingness" necessary to foster the self-discipline required for sustained academic motivation (Baumrind, 1971).

While parenting styles directly shape a student's motivational orientation, their impact on academic achievement is often mediated by these motivational factors. Research indicates that intrinsic motivation robustly predicts GPA and standardized test scores. In a longitudinal study, Wigfield and Eccles (2000) found that students who assign high "subjective task value" to their schoolwork, a trait fostered by authoritative parenting, show greater persistence and achievement. Parenting style also influences achievement indirectly by fostering self-regulation. Grolnick and Ryan (1989) found that children of authoritative parents possess higher "perceived competence," which serves as a mediator. Because these parents encourage independent problem-solving,

students develop the self-regulatory cycles (Forethought, Performance, Reflection) identified by Zimmerman (2000) as essential for high-level achievement.

In Ethiopia, the traditional family structure often leans authoritarian, yet recent studies suggest a shift toward authoritative practices in urban centers. Empirical research in Ethiopia shows that parenting styles are significantly associated with students' academic motivation. For instance, Dagnew (2018) found that among secondary students in Bahir Dar, authoritative parenting was positively correlated with both intrinsic and extrinsic academic motivation, whereas more controlling or neglectful styles were less supportive of motivational outcomes.

Similarly, research in Haramaya found that authoritative and authoritarian parenting styles were significantly associated with higher academic achievement motivation, whereas neglectful parenting was linked to lower motivation among adolescents (Mihret et al., 2019). Furthermore, Dagnew (2018) reported that students' attitudes toward school, largely shaped by the home environment, were significantly correlated with their final national exam results. These findings suggest that in Ethiopia, as elsewhere, parenting style does not merely dictate behavior; it builds the psychological infrastructure (motivation and self-efficacy) that makes achievement possible.

2.2.5. The Relationship between Parenting Style and Academic Responsibility

Parenting styles, as conceptualized by Baumrind (1966, 1971), encompass authoritative, authoritarian, permissive, and neglectful approaches, each shaping children's socio-emotional development and behavioral outcomes. In the context of academic responsibility, defined as students' self-directed engagement in learning tasks such as homework completion, study habits, goal-setting, and accountability for academic performance, these styles play a critical role. Authoritative parenting, characterized by high warmth, responsiveness, and reasonable demands,

fosters intrinsic motivation and self-efficacy, enabling children to take ownership of their education. Conversely, authoritarian styles, marked by high control and low warmth, may promote compliance but often undermine autonomy, leading to extrinsic motivation or avoidance behaviors. Permissive parenting, with high warmth but low structure, can result in lower self-regulation, while neglectful styles correlate with disengagement and poor responsibility (Pinquart, 2016; Spera, 2005).

Empirical evidence consistently links authoritative parenting to greater academic responsibility and achievement. For example, research among Chinese adolescents shows that authoritative parenting predicts academic achievement through increased learning engagement and self-regulation, as students internalize responsibility in supportive yet structured family environments (Cheung & Pomerantz, 2011). Similarly, cross-cultural research in African contexts indicates that authoritative parenting is associated with higher academic self-efficacy and responsible academic behavior, which, in turn, predict improved academic performance (Pinquart & Kauser, 2018). Among Iranian high school students, authoritative parenting has been shown to correlate positively with educational performance, largely through enhanced self-motivation and academic persistence (Rahimpour et al., 2015). In contrast, authoritarian and permissive parenting styles tend to show negative or weak associations with proactive academic behaviors, suggesting that overly controlling or overly lenient approaches may undermine the development of academic responsibility.

Further empirical evidence clarifies the mechanisms by which parenting styles influence adolescents' academic outcomes. Research among Ethiopian secondary school students found that authoritative parenting was positively associated with academic motivation, self-concept, and overall achievement, suggesting that structured yet emotionally supportive parenting fosters

students' sense of responsibility and engagement in learning tasks (Dagnew, 2018). Expanding beyond the Ethiopian context, a multinational investigation found that the positive association between authoritative parenting and academic achievement held across countries, although the magnitude of the effect varied with national levels of economic development (Cupar et al., 2025).

Additionally, cross-cultural meta-analytic findings indicate that authoritative parenting generally predicts higher academic performance across diverse societies, whereas authoritarian and permissive styles show weaker or less stable associations with achievement outcomes (Pinquart & Kauser, 2018). Complementing these findings, evidence from Pakistani secondary school students showed that authoritative parenting enhanced academic achievement orientation indirectly through self-regulatory skills and digital literacy, underscoring the role of internal competencies as mediating pathways (Hassan et al., 2022). Although authoritarian parenting may occasionally yield context-specific advantages in more collectivist settings, the broader body of research consistently suggests that autonomy-supportive and responsive parenting practices are more conducive to sustained academic motivation, responsibility, and long-term educational success.

Qualitative and longitudinal insights add depth, showing how parenting evolves and shapes long-term responsibility. Among Yemeni high school students in Turkey, authoritative parenting enhanced social responsibility, which mediated academic achievement by fostering ethical accountability in learning (Gawas, 2021). Among Zambian adolescents, positive parenting, akin to authoritative, is directly linked to better performance because it cultivates intrinsic responsibility amid socioeconomic challenges (Kaani et al., 2024). Studies on resilience further indicate that authoritative styles build academic motivation and self-efficacy, serving as buffers against setbacks (Hayek et al., 2022; Shengyao et al., 2024). Yet some findings reveal inconsistencies; for

example, among immigrant or minority groups, permissive styles occasionally correlate with resilience due to adaptive flexibility, though generally at the cost of structured responsibility (Driscoll et al., 2008).

In summary, the relationship between parenting styles and academic responsibility is largely positive for authoritative approaches, which cultivate autonomy, self-efficacy, and intrinsic motivation, leading to superior academic outcomes. Authoritarian and permissive styles often impede responsibility by over-controlling or under-structuring, resulting in reliance on external cues or disengagement. Mediators such as self-efficacy, engagement, and cultural context explain variations, with collectivist societies sometimes favoring stricter styles to foster disciplined responsibility. Discrepancies across studies may stem from methodological differences, such as self-report biases or cross-sectional designs, underscoring the need for longitudinal research in diverse populations. Overall, these findings support parenting interventions that promote authoritative practices to enhance students' academic responsibility, particularly in educational policy and family support programs.

2.2.6. The Relationship between Parenting Style and Academic Achievement

Research consistently shows that parenting style is significantly associated with children’s academic achievement, though the magnitude and direction of this relationship vary by parenting type and social context. Authoritative parenting, characterized by high warmth and appropriate control, is most often positively correlated with academic achievement. For example, studies across diverse settings have found that students raised with authoritative parenting typically achieve higher grades and demonstrate stronger academic performance than those raised with other parenting styles. This pattern suggests that a balanced combination of responsiveness and expectations fosters learning engagement and cognitive competence (Cupar et al., 2025;

Dehyadegary et al., 2012; Rao & Wang, 2022). These findings align with established developmental theory, which posits that authoritative parents provide both support and structure, thereby encouraging intrinsic motivation and self-regulated study habits that support academic success.

In contrast, other parenting styles show less consistent or weaker associations with achievement. Research at Fasilo Secondary School in Ethiopia found that authoritarian and permissive parenting styles were negatively associated with students' academic achievement, whereas neglectful parenting showed no significant relationship, highlighting the risks of overly strict or overly lenient approaches for educational outcomes (Dagnew, 2018). Similarly, cross-national evidence suggests that authoritarian and permissive styles may be linked to poorer academic performance, though cultural and economic contexts can moderate these effects (Cupar et al., 2025). These patterns reinforce the notion that parental warmth and supportive involvement are more conducive to academic achievement than approaches marked by excessive control, low engagement, or a lack of structure.

Additionally, empirical literature emphasizes that parenting influences academic outcomes both directly and indirectly through mediators such as academic motivation and self-concept. Studies have documented that positive parenting practices are associated with higher academic self-efficacy, motivation, and adaptive learning behaviors, which, in turn, strongly predict achievement (Kim & Kim, 2021). Although some research has found no direct link between specific styles and academic performance in certain demographic groups (Joshi et al., 2003), the broader body of evidence supports a theoretically grounded relationship in which parenting style shapes the psychological and environmental conditions that promote academic success. Thus,

authoritative parenting stands out as a robust predictor of higher achievement across multiple educational contexts.

2.2.7. The Relationship between Parental Behavior and Academic Motivation

Extensive empirical evidence shows a robust positive association between supportive parental behaviors, such as involvement, autonomy support, and authoritative parenting, and academic motivation among secondary school students (Barger et al., 2019; Gonzalez-DeHass et al., 2005; Vasquez et al., 2016). Meta-analyses confirm that parental involvement, particularly through academic socialization (e.g., communicating expectations and discussing school-related matters), strongly predicts greater student motivation, engagement, and self-regulated learning (Barger et al., 2019; Fan & Chen, 2001; Hill & Tyson, 2009). Authoritative styles that combine warmth and structure foster intrinsic motivation by modeling adaptive behaviors and reinforcing students' sense of competence, whereas controlling or psychologically intrusive behaviors are linked to diminished motivation and amotivation (Gonzalez-DeHass et al., 2005). These patterns hold across diverse adolescent samples, underscoring how parental behaviors shape motivational orientations during the critical transition to greater independence in secondary education.

A synthesis of the literature, grounded in Self-Determination Theory (SDT), indicates that parental behavior influences academic motivation primarily by satisfying the basic psychological needs for autonomy, competence, and relatedness. Autonomy-supportive parenting, characterized by encouraging choice, providing rationale for tasks, and minimizing pressure, facilitates the internalization of academic goals, leading to higher self-determined motivation and persistence (Celik, 2024). Perceived parental academic involvement and monitoring indirectly boost achievement through intrinsic and extrinsic motivation pathways, whereas excessive control undermines these processes (Eker & Yildizli, 2025). For secondary students, home-based

discussions and realistic expectations are particularly potent because they align with adolescents' developmental needs for autonomy amid increasing academic demands.

Despite these insights, notable gaps persist, limiting applicability across diverse contexts, especially among secondary school populations in non-Western settings. Most rigorous studies rely on Western or East Asian samples, and mechanisms such as autonomy support may manifest differently in collectivist cultures. Research in sub-Saharan African contexts remains sparse and often descriptive, overlooking cultural nuances in parental behavior (e.g., extended family roles or socioeconomic pressures). Additional limitations include overreliance on cross-sectional self-reports, insufficient differentiation of maternal versus paternal influences, and limited examination of longitudinal trajectories or of moderating factors such as student gender and school type. Future investigations addressing these gaps, particularly through culturally sensitive designs in underrepresented regions like Ethiopia, would strengthen theoretical models and inform targeted interventions to optimize academic motivation among secondary school students.

2.2.8. The Relationship between Parental Behavior and Academic Responsibility

Empirical research across diverse educational contexts consistently shows that parental behavior is pivotal in shaping students' academic responsibility. Parental behavior, typically conceptualized through dimensions such as warmth, behavioral control, monitoring, communication, and involvement in schooling, provides the foundational socialization context in which responsibility toward learning is cultivated. Studies grounded in Self-Determination Theory and socialization frameworks suggest that parents who combine emotional warmth with structured guidance promote the internalization of academic norms and self-regulatory capacities. For example, Grolnick and Ryan (1989) found that parental autonomy support and involvement were positively associated with children's self-regulation and academic competence. Similarly, Hill and

Tyson (2009), in a meta-analysis of parental involvement in middle school, reported that supportive parental behaviors, particularly academic socialization and communication about school expectations, were significantly related to students' responsibility for homework completion and classroom engagement. These findings indicate that when parents provide warmth and clear expectations, students are more likely to assume ownership of their academic tasks and obligations.

Further international evidence reinforces the link between constructive parental behavior and students' academic responsibility. Jeynes (2012), synthesizing findings from multiple studies, concluded that parental expectations, encouragement, and consistent monitoring significantly predicted students' academic engagement and responsible study habits. In Asian contexts, Cheung and Pomerantz (2011) found that parental involvement characterized by supportive communication and high expectations fostered adolescents' academic self-discipline and persistence. Conversely, overly controlling or psychologically intrusive parenting was associated with diminished self-regulation and reduced academic accountability. These findings highlight the importance of balanced parental behavioral control—firm yet supportive—in promoting students' sense of duty toward their educational responsibilities. Parental behaviors that communicate positive intent and confidence in children's abilities appear particularly influential in encouraging students to internalize academic standards and regulate their learning independently.

In the Ethiopian context, empirical studies also highlight the important role of parental behavior in fostering students' academic responsibility. For example, research in secondary schools in Oromia found that parental engagement practices, including encouragement, communication, and support for learning, were associated with students developing positive attitudes toward their studies and maintaining focus on academic goals (Feyisa & Gonfa, 2024).

Similarly, a comparative study of parental engagement in Addis Ababa found that parents who provided homework support and maintained communication about schoolwork were more likely to create environments conducive to responsible academic behaviors, such as consistent study habits and task completion (Beyene & Asgedom, 2025). Furthermore, in the East Hararghe Zone, studies reported that higher parental involvement was linked to stronger student support at home and greater academic success, indicating that parental encouragement and involvement in schooling positively influence students' accountability and active participation in learning activities (Assefa & Sintayehu, 2025). However, parental involvement in Ethiopia often varies by socioeconomic status, educational background, and urban–rural differences, which may moderate its influence on students' academic behaviors.

Despite growing recognition of the role of family-related variables, limited research has explicitly examined how specific dimensions of parental behavior, such as warmth, control, and communication, predict academic responsibility within an integrated framework. Therefore, further investigation is warranted to clarify these relationships and provide culturally grounded evidence on how parental behavior contributes to the development of students' autonomous academic responsibility in Ethiopian educational settings.

2.2.9. The Relationship between Parental Behavior and Academic Achievement

A substantial body of international research establishes that parental behavior exerts a pivotal influence on secondary school students' academic achievement. Parental behaviors, typically measured through dimensions such as warmth, behavioral control, monitoring, communication, and direct involvement in schooling, serve as core socialization processes that shape children's educational trajectories. Meta-analytic findings consistently show positive associations between parental involvement and academic achievement across grade levels and

cultural settings (Hill & Tyson, 2009; Jeynes, 2012). In particular, parental academic socialization, encompassing the clear communication of educational expectations, encouragement, and the transmission of the value of schooling, emerges as a stronger predictor of achievement than superficial participation in school events (Hill & Tyson, 2009). Likewise, Wang and Sheikh-Khalil (2014) showed that parental monitoring combined with supportive communication longitudinally predicted higher grade-point averages and greater academic engagement among adolescents. Collectively, these results indicate that the combination of parental warmth, structured guidance, and explicit expectations enables secondary students to internalize achievement-oriented values and sustain stronger academic performance.

Cross-cultural studies further corroborate the robust link between constructive parental behaviors and academic success among secondary students. In East Asian contexts, Cheung and Pomerantz (2011) found that parental involvement characterized by high expectations and emotional support was positively associated with adolescents' achievement, and this relationship was mediated by improved self-regulation and persistence. In contrast, psychologically controlling practices, marked by excessive pressure and intrusion, were linked to poorer academic outcomes. Similarly, Spera's (2005) review concluded that authoritative parenting, which integrates high responsiveness with appropriate demandingness, reliably predicts superior academic achievement relative to authoritarian or permissive styles. Taken together, these findings illustrate that parental warmth, encouragement, and effective communication cultivate a home motivational climate that nurtures academic competence and long-term achievement in secondary education.

In the Ethiopian context, a growing body of empirical research echoes international patterns, highlighting the beneficial role of parental behavior in secondary school students' academic performance. Research across various Ethiopian regions indicates that parental

involvement, including monitoring school activities, providing academic support at home, and maintaining communication with teachers, is positively associated with students' achievement (Assefa & Sintayehu, 2019; Feyisa & Gonfa, 2025). Studies focused on Addis Ababa secondary schools similarly reveal that parental engagement in homework supervision and supportive academic dialogue is associated with improved student outcomes. Nonetheless, factors such as parental educational background, socioeconomic status, and urban–rural divides appear to moderate these associations. Although local evidence is expanding, few studies have yet applied comprehensive theoretical frameworks to examine how specific dimensions of parental behavior (warmth, control, and communication) interact to influence secondary students' achievement. Context-sensitive, theory-driven research is therefore essential to elucidate the mechanisms through which parental behavioral practices promote academic success within Ethiopian secondary education settings.

2.2.10. The Relationship between Academic Motivation and Academic Responsibility

Academic motivation and academic responsibility are closely intertwined constructs that jointly shape students' engagement patterns and educational outcomes. Academic motivation refers to the internal and external forces that drive students to learn. In contrast, academic responsibility reflects students' ownership of learning behaviors, including self-regulation, task completion, attendance, and persistence (Zimmerman, 2015). Empirical evidence suggests that motivated students are more likely to develop self-regulated behaviors that constitute academic responsibility. For example, academic motivation has been shown to predict adolescents' study habits, homework completion, and classroom participation over time (Wang et al., 2014).

Empirical evidence suggests that motivated students are more likely to develop the self-regulated behaviors that constitute academic responsibility. For example, research indicates that a

student's underlying purpose for learning strongly shapes their ability to remain disciplined. Specifically, students with a "self-transcendent" or intrinsic purpose for their education demonstrate higher levels of academic self-regulation and are better equipped to persist through tedious but essential learning tasks (Yeager et al., 2014). This suggests that responsibility is not merely about compliance but about a motivated commitment to long-term goals. Furthermore, the impact of these motivational forces is often sustained and compounded over time. Longitudinal evidence demonstrates a multiplicative effect in which intrinsic and extrinsic motivations interact to predict academic growth and sustained responsibility across various stages of schooling (Liu et al., 2019). These findings align with theoretical models that posit motivation as a precursor to self-regulated learning and responsibility, underscoring the importance of both motivational orientation and self-regulatory skill development in fostering academic engagement and success.

Cross-cultural research consistently shows a strong positive relationship between academic motivation and academic responsibility, suggesting that these dynamics are universal across diverse educational systems. In the United States, foundational research demonstrated that motivational beliefs, particularly self-efficacy and goal orientation, are significant predictors of self-regulated learning and responsible study behaviors, such as effective time management and persistence (Pintrich & De Groot, 1990). This study highlighted that knowing cognitive strategies alone is insufficient; students must be motivated to regulate their effort and behavior to perform well (Pintrich & De Groot, 1990).

Similarly, longitudinal research in Finland found that adolescents with higher levels of school engagement and motivation developed stronger study routines and greater responsibility in meeting academic demands (Salmela-Aro & Upadyaya, 2014). Conversely, students facing high

schoolwork demands without sufficient personal or study resources are prone to school burnout, marked by cynicism and a sense of inadequacy (Salmela-Aro & Upadyaya, 2014).

These relationships are also evident in Asian contexts. Research grounded in Self-Determination Theory (SDT) indicates that autonomous motivation, encompassing intrinsic interest and identified regulation, is strongly associated with proactive learning behaviors and homework effort among students (Feng et al., 2019). Studies in China further reinforce that autonomous motivation leads to higher academic engagement and innovative work behaviors among educators, driven by the universal satisfaction of basic psychological needs for autonomy and competence (Ren et al., 2021).

In the Ethiopian context, empirical studies also highlight an association between academic motivation and academic responsibility, though the literature remains relatively limited compared with global research. For example, Gebre et al. (2026) examined secondary school students in the South region. They found that students with stronger motivational orientations, particularly internal motives related to personal goals and interest in learning, tended to demonstrate better study habits, submit assignments on time, and participate actively in class, which are core indicators of academic responsibility. Likewise, Woreta (2024) reported that students' academic motivation significantly predicted regular attendance and engagement in classroom activities among high school students in Ethiopia. These findings suggest that, consistent with global research, motivated Ethiopian students are more likely to adopt responsible behaviors that support academic achievement. However, more comprehensive, theory-driven studies are needed that explicitly examine the multidimensional nature of motivation and responsibility within Ethiopian educational settings.

2.2.11. The Relationship between Academic Motivation and Academic Achievement

Extensive research has examined the link between motivation and academic achievement, highlighting a generally positive correlation (Steinmayr et al., 2019; Vu et al., 2022; Vu et al., 2024; Walker et al., 2024). For instance, Steinmayr et al. (2019) identified a favorable connection between motivational factors and enhanced educational outcomes. Consistent with this, Vu et al. (2022) developed a conceptual framework that ties self-directed drive to academic outcomes. They also recommended approaches to boost learners' drive and, in turn, their results, such as promoting independence, highlighting the relevance of learning content, supporting accomplishments, igniting and maintaining curiosity, and building supportive environments. In addition, Asanre (2024) used a quantitative survey to assess how internal drive affects math outcomes among 315 senior high school learners in Lagos State, Nigeria. Analysis involved descriptive statistics, t-tests, correlation coefficients, and regression techniques. Results showed that Nigerian high schoolers display a strong drive for math learning, with internal factors and gender emerging as key indicators of math success in the group.

Likewise, Adamma et al. (2018) used a descriptive survey to examine how extrinsic and intrinsic motivation influence math performance among 200 primary six pupils in Nigeria. Instruments included an academic motivation scale and a mathematics achievement test. Results indicated that motivation improves academic performance, with gender-related variations in both performance and motivation types. In a similar vein, Asanre (2024) applied quantitative methods in a survey to study "Drive for Math Learning and Gender as Factors in High School Math Success" among pupils from Ijebu Ode, Nigeria. Data were analyzed using percentages, averages, standard deviations, t-tests, correlations, and regressions. The conclusions revealed a high drive for math

among Nigerian high schoolers, identifying internal drive and gender as main predictors of math outcomes.

Moreover, Ekpe et al. (2014) examined how self-efficacy moderates the link between family economic status and scholastic success in a survey of 275 final-year business undergraduates from three Nigerian universities across regions. Findings emphasized the importance of self-drive for success, indicating that both self-drive and positive family economics are essential for achievement. However, some studies report no meaningful statistical associations or only minor links between drive and scholastic success. For example, Erentaite et al. (2022) analyzed drive profiles (including internal, external, and lack of drive) and math success in 363 Indian teens in India versus 355 Indian immigrant teens in Canada. Regression results indicated no significant associations for Indian teens in India, but both internal and external drives were significantly linked to math success for immigrants in Canada. To evaluate the relationship between motivation and academic achievement, Yarin et al. (2022) conducted a cross-sectional correlational study involving 251 undergraduate students enrolled in mathematics courses in Peru. Academic performance was measured using students' mathematics course grades, while motivation was assessed through a 28-item self-report instrument capturing intrinsic motivation, extrinsic motivation, and amotivation. The findings revealed only a weak association between overall motivation and academic performance, with similarly modest relationships observed between intrinsic and extrinsic motivational orientations and academic outcomes.

In Ethiopia, research on the connection between academic motivation and achievement has demonstrated positive links. For example, Kassaw et al. (2024) examined influences on higher education performance at various Ethiopian institutions, identifying drive as a major element and linking success to habits, presence, and involvement. Similarly, Dagnew (2017) found in an

Ethiopian correlational study that views on schooling, educational worth, and drive for success positively relate to performance, implying that positive views, high educational regard, and robust drive lead to better results. Conversely, Gota (2012) studied ties between drive, views, and science success in Southern Ethiopia with 100 participants (mostly male), revealing low to medium ties between drive and science outcomes.

Results on the relationship between academic drive and success vary; these discrepancies could stem from differences in drive assessments (e.g., SDT versus broad tools), groups (e.g., cultural settings), study methods (e.g., cross-sectional versus longitudinal), and analytical techniques (e.g., basic correlations versus sophisticated statistics).

Nevertheless, limited research has applied Self-Determination Theory comprehensively to examine the motivation–achievement relationship among Ethiopian students. Furthermore, the mediating role of academic motivation in linking contextual factors, such as Perceived Teachers' Conscious Discipline and parent-related variables (parenting style and parental behavior), to achievement remains underexplored in secondary schools. Addressing these gaps is essential to developing culturally responsive, theoretically grounded interventions that strengthen students' academic achievement.

In summary, although a substantial body of literature affirms the importance of academic motivation for educational achievement, variations in findings underscore the need for context-sensitive, theory-driven investigations. The present study seeks to contribute to this discourse by examining academic motivation within a multidimensional framework and by exploring its direct and mediating effects on academic achievement in the Ethiopian secondary school context.

2.2.12. The Relationship between Academic Responsibility and Academic Achievement

A substantial body of empirical research has examined the association between academic responsibility and academic achievement, consistently reporting a positive relationship between students' responsible learning behaviors and academic outcomes (Crede et al., 2017; Duckworth & Seligman, 2005; Pintrich, 2004; Zimmerman, 2002). Academic responsibility, often operationalized through indicators such as task completion, time management, accountability, persistence, and ownership of learning, has been closely linked to self-regulated learning processes. For instance, Zimmerman (2002) conceptualized responsible learners as proactive agents who plan, monitor, and evaluate their academic activities, thereby enhancing performance. Supporting this, Duckworth and Seligman (2005), in a longitudinal study of adolescents, found that self-discipline, a core component of academic responsibility, predicted academic performance more strongly than IQ. Similarly, Crede et al. (2017), in a meta-analytic review, reported that conscientiousness-related traits, including diligence and reliability, significantly predict grade point average (GPA) across educational levels. These findings collectively suggest that students who assume responsibility for their learning tasks are more likely to achieve higher academic outcomes.

Parallel evidence from diverse cultural contexts further supports the responsibility–achievement link. In the United States and Europe, longitudinal and correlational studies indicate that homework responsibility, punctuality, and sustained engagement significantly predict standardized test scores and cumulative GPA (Pintrich, 2004; Richardson et al., 2012). Richardson et al. (2012), in a meta-analysis of psychological correlates of university GPA, identified self-regulatory behaviors and effort regulation, central components of academic responsibility, as strong predictors of achievement. Likewise, Asian studies emphasize that disciplined study habits

and personal accountability contribute significantly to mathematics and science achievement (Li et al., 2018). In Sub-Saharan Africa, emerging research shows that students who demonstrate responsibility through regular attendance, assignment completion, and adherence to academic expectations tend to outperform peers who lack these behaviors (Chowa et al., 2013). However, some studies report modest or context-dependent associations, suggesting that the strength of the relationship may vary by measurement approach, age group, and contextual supports. Differences in operational definitions, such as whether academic responsibility is measured as self-discipline, conscientiousness, or self-regulation, also contribute to variability in findings.

In Ethiopia, empirical studies increasingly recognize responsible learning behaviors as non-cognitive predictors of academic achievement. For example, Dagnew (2017) found that students' study habits and engagement, closely aligned with academic responsibility, were positively associated with academic performance in secondary schools. Similarly, Kassaw et al. (2024) reported that attendance consistency, task commitment, and classroom participation significantly predicted higher academic results in Ethiopian higher education institutions. Conversely, Gota (2012) found only moderate associations between behavioral factors and science achievement, suggesting that contextual variables such as instructional quality and socioeconomic background may interact with students' levels of responsibility. Despite these emerging insights, comprehensive studies explicitly conceptualizing academic responsibility as a multidimensional construct remain limited in the Ethiopian secondary school context. Moreover, little attention has been given to examining academic responsibility as a potential mediator linking contextual influences, such as parental behavior and teachers' socio-emotional characteristics, to academic achievement.

In summary, global and regional evidence largely supports a positive, meaningful relationship between academic responsibility and academic achievement. Nevertheless, inconsistencies across contexts and methodological approaches underscore the need for theory-driven, culturally grounded research. The present study seeks to contribute to this discourse by examining academic responsibility as a central predictor and potential mediator within a broader framework of student achievement in Ethiopian secondary schools.

2.3. Summary of Reviewed Literature

This review synthesizes theoretical and empirical literature on teachers' conscious discipline practices; family-related variables (parenting style and parental behavior); students' intrapersonal factors (academic motivation and academic responsibility); and their interrelationships with academic achievement. Drawing on foundational frameworks such as Bailey's Conscious Discipline model (encompassing the Four Skills of Discipline, including composure as foundational self-regulation, encouragement for building competence and resilience, empathy for perspective-taking, and positive intent for reframing misbehavior as a call for help or a skill deficit via a positive attributional stance), Bandura's social cognitive theory, Bronfenbrenner's ecological systems theory, Deci and Ryan's self-determination theory (SDT), and attributional perspectives aligned with positive intent, the literature underscores the multidimensional and relational nature of teacher and family influences on students' achievement. However, significant theoretical fragmentation, empirical inconsistencies, and largely untested mediation pathways highlight the need for further investigation, especially in underrepresented contexts such as Ethiopian secondary schools.

Theoretically, Conscious Discipline conceptualizes classroom management as an internally regulated, relationship-centered process in which teachers' socio-emotional competencies (with adult self-regulation as the foundation) shape student outcomes. While Bailey's full framework provides tools for translating these competencies into teaching moments, it does not explicitly articulate pathways to academic achievement through student-level mediators such as academic motivation and responsibility. SDT complements this by positing that students' motivation (autonomy, competence, relatedness) flourishes under supportive teacher and parent behaviors, such as empathy (relatedness), encouragement (competence), and composure (modeling regulation). Social cognitive theory highlights how teachers' modeling of composure and emotional control fosters students' self-regulatory behaviors. Ecological systems theory situates these influences within interconnected micro- and mesosystems (school and home), emphasizing dynamic interactions. Attributional reframing via positive intent further supports constructive responses to behavior. Despite these contributions, no single integrated framework fully specifies how teachers' conscious discipline (across its four skills) and family-related variables jointly influence academic achievement through academic motivation and responsibility in a comprehensive predictive model.

A major theoretical gap is the absence of a tested, integrated structural pathway, such as: Teachers' conscious discipline practices / constructive parenting style / supportive parental behavior → academic motivation → academic responsibility → academic achievement (where academic responsibility reflects students' accountability, persistence, task completion, and ownership of learning outcomes). Moreover, contextual specificity, particularly in Ethiopian educational settings, where cultural norms around authority, collectivism, and discipline may

moderate effects, remains largely unexplored, limiting the cultural applicability of Western-derived models.

Empirically, the reviewed literature generally supports positive associations among these constructs, though effect sizes vary. Teachers' empathy, encouragement, and broader socioemotional competence have been linked to higher student engagement, greater intrinsic motivation, and fewer behavioral issues. Emotionally supportive classrooms predict improved academic achievement. Constructive (e.g., authoritative) parenting styles and parental warmth consistently enhance motivational orientation and academic responsibility. Academic motivation, particularly intrinsic and mastery forms, reliably predicts achievement, whereas academic responsibility (persistence and self-regulation) shows positive but sometimes weaker or context-dependent associations. Teachers' conscious discipline skills often exert indirect effects on achievement through motivational and self-regulatory mechanisms.

Findings are not uniform, however. Relationship strengths vary by cultural context (e.g., parenting style effects moderated by sociocultural norms), measurement approaches (multidimensional vs. single-dimensional), and methodology (correlational vs. structural equation modeling). Some studies report robust effects of supportive teacher behaviors; others find weaker or fully indirect associations. Variability in how Conscious Discipline is operationalized further contributes to inconsistencies. In Ethiopia, research has historically emphasized instructional methods, resource constraints, the implementation of active learning, and traditional disciplinary issues (including persistent corporal punishment despite policy bans), with minimal examination of teachers' relational and emotional regulation practices or of integrated models involving family variables. Emerging studies (e.g., on teacher socio-emotional competence influencing engagement

and motivation or on student emotional intelligence) signal growing attention to SEL but do not address Conscious Discipline or the proposed mediations.

Generally, the reviewed literature identifies teachers' conscious discipline practices and family-related variables as key antecedents of students' academic motivation and responsibility, both of which contribute to academic achievement. Nevertheless, the lack of a fully integrated theoretical model, limited multidimensional operationalization of conscious discipline, and sparse testing of mediation pathways (especially in non-Western secondary contexts) highlight the need for comprehensive investigation. Addressing these gaps, particularly through culturally sensitive research in Ethiopian secondary schools, can enhance theoretical coherence, yield contextually relevant evidence, and inform teacher training, family engagement programs, and policies aimed at improving academic achievement.

2.4. Conceptual Framework of the Study

This study develops a conceptual framework that integrates four complementary theoretical perspectives, namely the conscious discipline model (Bailey, 2015), social cognitive theory (Bandura, 1977), ecological systems theory (Bronfenbrenner, 1979), and Self-Determination Theory (SDT) (Deci & Ryan, 2000), to examine the structural relationships among components of teachers' conscious discipline (empathy, encouragement, positive intent, and composure), family-related variables (parenting style and parental behavior), academic motivation, academic responsibility, and academic achievement.

This integrative framework addresses a critical gap in the literature by unifying teacher-level socio-emotional competencies, family-level influences, and student-level intrapersonal mechanisms within a single predictive model. Rather than examining isolated associations, the

framework conceptualizes academic achievement as the outcome of sequential socio-emotional and motivational processes that unfold across interconnected ecological systems.

Grounded in Conscious Discipline theory, teachers' composure is positioned as the regulatory foundation of classroom climate, enabling empathy, encouragement, and positive intent to serve as relational mechanisms that foster psychological safety and constructive attribution patterns. Social cognitive theory further explains how teachers' emotional regulation and modeling influence students' development of self-regulatory capacities, thereby strengthening academic responsibility. Ecological systems theory situates parenting style and parental behavior within the home microsystem, where they interact with teacher influences in the school microsystem to shape students' motivational orientations. Self-Determination Theory provides the motivational mechanism, proposing that supportive teacher and parent behaviors satisfy students' needs for autonomy, competence, and relatedness, thereby enhancing academic motivation.

Within this integrated perspective, teachers' conscious discipline and family-related variables are treated as exogenous variables, academic motivation and academic responsibility as mediators, and academic achievement as the endogenous outcome variable. The framework proposes that socio-emotional discipline practices and constructive parenting climates enhance students' academic motivation; motivated students subsequently develop stronger academic responsibility (e.g., persistence, task completion, accountability), which in turn leads to higher academic achievement.

Accordingly, the model specifies multiple direct and indirect pathways, such as:

- Direct effects of teachers' use of conscious discipline on academic motivation, academic responsibility, and academic achievement.

- Direct effects of parenting style and parental behavior on academic motivation, responsibility, and achievement.
- Indirect effects of teacher and family variables on academic achievement through academic motivation and academic responsibility.

A parallel mediation pathway:

Teachers' conscious discipline/parenting style/parental behavior → academic motivation → academic achievement

Teachers' conscious discipline/parenting style/parental behavior → academic responsibility → academic achievement

This proposed structure advances prior research by explicitly modeling academic motivation and academic responsibility as parallel mediators. In this framework, both variables serve as independent pathways through which teachers' conscious discipline and family-related factors influence academic achievement. Figure 1 presents fifteen theoretically grounded pathways that specify the direct and indirect effects of the exogenous constructs on the endogenous variable. The hypothesized direct and indirect effects were tested using structural equation modeling (SEM) to assess direct and parallel mediation among the study variables.

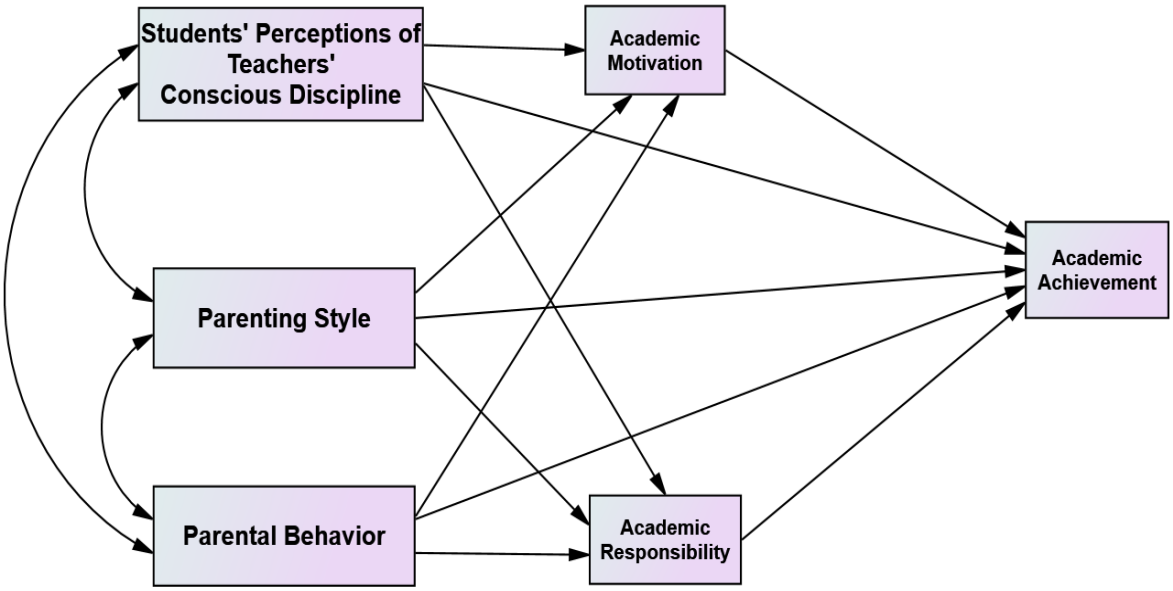

Figure 1. Hypothesized Conceptual Framework of the Study.

Model Descriptions: The proposed conceptual framework presents an integrated set of relationships grounded in relevant theoretical perspectives and supported by existing empirical evidence. The model examines how students' perceptions of teachers' conscious discipline, parenting style, and parental behavior influence academic achievement, both directly and indirectly through two mediators: academic motivation and academic responsibility.

As shown in Figure 1, the three exogenous variables (students' perceptions of teachers' conscious discipline, parenting style, and parental behavior) are allowed to correlate with one another. Each variable is hypothesized to predict academic motivation and academic responsibility, which, in turn, are expected to influence academic achievement. The model also specifies direct paths from the three exogenous variables to academic achievement, allowing examination of both direct and

mediated effects. By specifying these pathways, the framework provides a comprehensive structure for testing the hypothesized direct and indirect associations among the study variables using structural equation modeling (SEM). The following sections outline the detailed hypotheses derived from this framework and explain the rationale for each proposed pathway.

Pathway 1: Students' Perceptions of Teachers' Conscious Discipline → Academic Achievement

This pathway posits that student-perceived Teachers' Conscious Discipline (PTCD) directly enhances students' academic achievement. Grounded in Conscious Discipline theory, PTCD encompasses empathy, encouragement, positive intent, and composure. Teachers who demonstrate emotional regulation, empathic understanding, constructive encouragement, and positive attribution toward students can create psychologically safe, supportive classroom environments. These environments reduce anxiety, foster engagement, and promote sustained academic effort, thereby facilitating higher academic achievement. Conversely, low levels of conscious discipline may generate classroom tension, emotional insecurity, and disengagement, which can negatively affect students' academic outcomes.

Pathway 2: Parenting Style → Academic Achievement

This pathway suggests that parenting style plays a significant role in shaping students' academic achievement. Parenting characterized by warmth, responsiveness, and appropriate behavioral control fosters a supportive family environment that promotes discipline, self-confidence, and positive attitudes toward learning. Parents who provide guidance, encouragement, and academic monitoring help children develop effective study habits and stronger motivation for academic success. These practices also enhance students' emotional security and perseverance in

academic tasks. Conversely, authoritarian, permissive, or neglectful parenting styles may weaken academic engagement, reduce self-regulation, and harm students' overall academic performance.

Pathway 3: Parental Behavior → Academic Achievement

This pathway assumes that parental behavior directly influences students' academic achievement through the emotional, social, and educational support provided within the family. Positive parental behaviors, such as active involvement in schooling, consistent encouragement, and constructive communication, reinforce students' academic commitment and foster achievement-oriented attitudes. Parents who show interest in their children's education often promote greater responsibility, persistence, and confidence in learning. In contrast, negative parental behaviors, such as lack of involvement, excessive criticism, or inconsistent support, may contribute to academic stress, diminished motivation, and lower educational attainment among students.

Pathway 4: Students' Perceptions of Teachers' Conscious Discipline → Academic Motivation

This pathway suggests that teachers' use of conscious discipline positively predicts academic motivation. Teachers who demonstrate empathy and encouragement satisfy students' psychological needs for relatedness and competence, thereby enhancing intrinsic and identified motivation. When students perceive teachers' fairness, emotional support, and positive intent, they are more likely to value academic tasks and engage in self-determined learning.

Pathway 5: Parenting Style→ Academic Motivation

This pathway suggests that parenting style plays a crucial role in developing students' academic motivation. Warm, supportive, and autonomy-enhancing parenting practices encourage students to value learning, set academic goals, and persist in challenging academic tasks. Parents

who provide emotional support, reasonable expectations, and constructive guidance foster intrinsic motivation and strengthen students' confidence in their academic abilities. Such parenting environments promote self-discipline, engagement, and a positive orientation toward learning. In contrast, overly controlling, inconsistent, or neglectful parenting styles may reduce students' sense of autonomy, weaken motivation, and limit active participation in academic tasks.

Pathway 6: Parental Behavior → Academic Motivation

This pathway assumes that parental behavior directly influences students' academic motivation by shaping their attitudes toward education and achievement. Positive parental behaviors, such as encouragement, active involvement in education, and effective communication, reinforce the importance of academic success and foster students' commitment to learning. When parents show interest in their children's educational progress and provide consistent support, students are more likely to develop stronger achievement motivation, persistence, and academic engagement. Conversely, negative parental behaviors, such as criticism, lack of support, or emotional detachment, may diminish students' enthusiasm for learning and reduce academic motivation.

Pathway 7: Students' Perceptions of Teachers' Conscious Discipline → Academic Responsibility

This pathway holds that teachers' deliberate discipline fosters students' academic responsibility. By modeling emotional regulation, accountability, and constructive problem-solving, teachers help students develop self-regulation. Empathetic, composed teachers promote classroom norms that emphasize task completion, persistence, and ownership of learning. These

practices cultivate responsible academic behaviors, including punctuality, homework completion, and sustained effort.

Pathway 8: Parenting Style → Academic Responsibility

This pathway holds that parenting style plays a key role in fostering students' academic responsibility. Parents who set clear expectations, provide consistent supervision, and encourage independent decision-making help children develop self-discipline, accountability, and effective study habits. Supportive, structured parenting environments promote responsibility by teaching students to manage academic tasks, meet obligations, and persist in completing school-related work. With ongoing guidance and reinforcement, students gradually internalize responsible behaviors that enhance academic functioning. In contrast, inconsistent or neglectful parenting may weaken students' sense of accountability and reduce their commitment to academic responsibilities.

Pathway 9: Parental Behavior → Academic Responsibility

This pathway assumes that parental behavior directly shapes students' academic responsibility. Positive parental behaviors, such as monitoring academic progress, offering encouragement, and setting appropriate rules and routines, reinforce responsible attitudes toward learning and schoolwork. Parents who actively support and guide their children's educational activities help cultivate time management, commitment, and personal accountability in academic contexts. These behaviors encourage students to take ownership of their learning tasks and fulfill academic obligations effectively. Conversely, limited parental involvement, inconsistent guidance, or a lack of support may hinder the development of responsible academic behaviors and reduce students' engagement in educational activities.

Pathway 10: Academic Motivation → Academic Achievement

This pathway posits that academic motivation directly enhances academic achievement. Motivated students demonstrate greater effort, persistence, strategic learning, and resilience in the face of challenges. Higher levels of intrinsic and identified motivation are linked to improved concentration, deeper cognitive processing, and better academic achievement.

Pathway 11: Academic Responsibility → Academic Achievement

This pathway posits that academic responsibility positively predicts academic achievement. Students who consistently complete assignments, manage their time effectively, and take ownership of their learning are more likely to achieve higher academic outcomes. Responsible academic behaviors translate motivational intentions into sustained performance and measurable academic achievement.

Pathway 12: Students' Perceptions of Teachers' Conscious Discipline → Academic Achievement via Academic Motivation

This pathway hypothesizes that Perceived Teacher Conscious Discipline (PTCD) enhances Academic Motivation (AM), which in turn improves Academic Achievement (AA). According to Conscious Discipline theory (Bailey, 2015), teachers who demonstrate empathy, encouragement, positive intent, and composure foster emotionally safe classroom climates. From the perspective of Self-Determination Theory (Deci & Ryan, 2000), such supportive environments satisfy students' psychological needs for autonomy, competence, and relatedness, thereby strengthening intrinsic and identified motivation. When these needs are met, students show greater engagement, persistence, and task commitment, all of which are strongly associated with improved academic

achievement. Conversely, emotionally unsupportive classroom environments may frustrate these needs, weaken motivation, and reduce academic achievement.

Pathway 13: Students' Perceptions of Teachers' Conscious Discipline → Academic Achievement via Academic Responsibility

This pathway posits that student-perceived Teacher Conscious Discipline (PTCD) promotes Academic Responsibility (AR), which in turn enhances Academic Achievement (AA). Social Cognitive Theory (Bandura, 1986) holds that students learn self-regulatory behaviors through modeling and social reinforcement. Teachers who model composure, accountability, and constructive problem-solving provide behavioral models that foster students' self-regulation and responsibility. Through observational learning and reciprocal determinism, students internalize disciplined behaviors such as persistence, task completion, and goal-directed effort. These responsibility-based behaviors serve as mechanisms that translate socio-emotional classroom experiences into measurable academic success. In contrast, inconsistent or emotionally reactive teacher behaviors may undermine the development of students' self-regulatory capacities, thereby limiting achievement outcomes.

Pathway 14: Family-Related Variables (parenting style & parental behavior) → Academic Achievement via Academic Motivation

This pathway holds that Parenting Style and Parental Behavior influence Academic Motivation (AM), which in turn contributes to Academic Achievement (AA). Ecological Systems Theory (Bronfenbrenner, 1979) positions the family as a primary microsystem that shapes students' developmental outcomes. In this context, autonomy-supportive and achievement-oriented parenting fosters internalized academic values and motivational orientations. Consistent

with Self-Determination Theory (Deci & Ryan, 2000), supportive parental behaviors enhance intrinsic motivation by nurturing competence and relatedness. When students perceive parental encouragement and the educational value of learning, they are more likely to sustain academic engagement and persist toward goals, ultimately improving achievement. Conversely, controlling or neglectful parenting may diminish intrinsic motivation and undermine academic performance.

Pathway 15: Family-Related Variables (parenting style & parental behavior) → Academic Achievement via Academic Responsibility

This pathway posits that Parenting Style and Parental Behavior strengthen Academic Responsibility (AR), which in turn promotes Academic Achievement (AA). Bronfenbrenner's (1979) ecological framework suggests that structured, supportive home environments foster behavioral competencies that transfer to the school context. Social Cognitive Theory (Bandura, 1986) further explains that parental modeling of discipline, monitoring, and accountability promotes the development of self-regulatory skills. Students exposed to consistent expectations and constructive guidance are more likely to internalize responsible academic behaviors, such as time management, persistence, and accountability. These behaviors serve as proximal predictors of academic success. Conversely, inconsistent parental involvement may hinder the development of responsibility and negatively affect achievement.

In conclusion, this conceptual framework integrates Bailey's (2015) Conscious Discipline model, Bandura's (1986) Social Cognitive Theory, Bronfenbrenner's (1979) Ecological Systems Theory, and Deci and Ryan's (2000) Self-Determination Theory to examine how students' perceptions of teachers' conscious discipline and family-related variables (parenting style and parental behavior) predict academic achievement among secondary school students, both directly and through academic motivation and academic responsibility. Within this framework, teachers'

socio-emotional competencies and family influences are conceptualized as primary contextual factors operating within interconnected school and home microsystems, while academic motivation and academic responsibility serve as parallel psychological and behavioral mechanisms linking these contextual influences to achievement outcomes. The hypothesized direct and parallel mediation pathways were tested using structural equation modeling (SEM) to estimate direct and indirect effects simultaneously. By integrating socio-emotional, ecological, and motivational perspectives, the model provides a comprehensive explanation of the relational and intrapersonal processes that shape academic achievement in secondary education, offering valuable implications for school-based and family-centered interventions.

Chapter Three: Materials and Methods

This chapter outlines the research methodology used in the study. It begins by presenting the research paradigm, approach, and design that underpin the investigation. The chapter further details the study population, sampling techniques, and data collection instruments. Additionally, it describes the variable classifications, data collection procedures, and statistical methods used in the analysis. This systematic presentation provides a clear understanding of the methodological processes and ensures the study's credibility and rigor.

3.1. Research paradigm

The study is grounded in the post-positivist research paradigm, which holds that an objective reality exists but can be understood only imperfectly because of the complexity of human behavior and measurement limitations (Cruickshank, 2012; Phillips & Burbules, 2000). This paradigm is well suited to quantitative research that examines relationships among variables using advanced statistical techniques. The present study provides a suitable framework for investigating relationships among family-related factors, perceived teachers' conscious discipline, academic motivation, academic responsibility, and academic achievement.

From an epistemological perspective, post-positivism emphasizes objectivity, empirical verification, and deductive reasoning (Creswell & Creswell, 2018). Guided by self-determination theory, ecological systems theory, and self-regulated learning theory, the study tests hypothesized relationships among constructs using standardized, validated instruments. This approach enhances the validity, reliability, and generalizability of the findings in the Ethiopian secondary school context. Methodologically, the study employs a non-experimental, correlational design and uses Structural Equation Modeling (SEM). Consistent with post-positivist principles, SEM allows

simultaneous assessment of measurement and structural models while accounting for measurement error. Model fit is evaluated using established indices, including χ^2/df, CFI, TLI, and RMSEA, to assess the extent to which the proposed model is supported by the observed data.

3.2. Research approach

The present study used a quantitative research approach because of its strong capacity to generate objective, quantifiable data that can be rigorously examined through statistical analysis to address the study objectives. This approach enables researchers to examine relationships among variables using numerical data and statistical procedures, thereby facilitating the identification of patterns, trends, and predictive associations within a given population. Moreover, findings derived from a carefully selected sample can be generalized to a larger population, enhancing the study's external validity. Quantitative research is characterized by the systematic collection of data using structured instruments and the application of statistical techniques to test hypotheses and interpret empirical evidence (Creswell & Creswell, 2018; Johnson & Christensen, 2019). In the present study, the quantitative approach was considered most appropriate because it enables the efficient analysis of large datasets obtained through standardized questionnaires and rating scales designed to measure teachers' conscious discipline practices, family-related variables, students' intrapersonal characteristics, and academic achievement.

3.3. Research design

The study used a correlational design to examine relationships among perceived teachers' conscious discipline, family-related factors, students' intrapersonal characteristics, and academic achievement. Correlational research is appropriate when the goal is to determine the magnitude and direction of associations among naturally occurring variables without experimental

manipulation (Gravetter & Wallnau, 2020). In this study, the design facilitates assessment of direct and indirect relationships among parenting style, parental behavior, perceived teachers' conscious discipline, academic motivation, academic responsibility, and academic achievement. Furthermore, it provides a rigorous framework for evaluating predictive relationships among these variables and contributes to a deeper understanding of the factors associated with students' academic achievement.

3.4. Study area, population, sample size, and sampling techniques

3.4.1. Study area

The study was conducted in Debre Markos Town, located in the East Gojjam Zone of the Amhara National Regional State, Ethiopia. Geographically, Debre Markos is approximately 300 km northwest of Addis Ababa, the capital of Ethiopia, and about 255 km southeast of Bahir Dar, the regional capital of the Amhara Region. The town is a prominent urban center and serves as an administrative, commercial, and educational hub for the surrounding areas. It has four public secondary schools: Debeza, Ethio-Japan, Tekle Haymanot, and Menkorer General Secondary Schools, which provide formal secondary education in accordance with the Ethiopian education system.

Debre Markos was selected as the study site for the following reasons. First, it is a medium-sized urban center in the Amhara Region that hosts multiple public secondary schools serving a diverse student population in terms of socioeconomic background and parental education levels. Second, the city's secondary schools operate under the standard Ethiopian curriculum and national examination system, making findings relevant to broader secondary education contexts in the country. Third, the researcher had established professional access to the schools and education

officials, which facilitated ethical clearance, data collection logistics, and high response rates. These practical and contextual considerations made Debre Markos a feasible and suitable setting for examining the relationships among family-related factors, students' perceptions of teachers' conscious discipline practices, students' academic motivation and responsibility, and academic achievement.

According to official records from the schools' administrative offices, the total number of students enrolled in Grades 9 and 10 during the 2023/2024 academic year was 3,542, of whom 1,686 were male and 1,856 were female. This relatively large student population offers sufficient variability in students' family backgrounds, school experiences, academic motivation, academic responsibility, and academic achievement, making the setting suitable for investigating the study variables.

Furthermore, as an urban educational center serving students from diverse socioeconomic and family backgrounds, Debre Markos provides a context for examining both family- and school-related influences on academic achievement. The presence of multiple secondary schools also enhances the representativeness of the study population and facilitates the investigation of variations in students' educational experiences. In addition, Debre Markos was selected for practical reasons, including the researcher's familiarity with the local language, culture, and educational environment, which facilitated access to participants, effective communication, and efficient data collection. These characteristics made Debre Markos Town an appropriate and feasible setting for addressing the study objectives.

3.4.2. Study population and sample size

The target population of this study comprised students enrolled in Grades 9 and 10 at selected public secondary schools in Debre Markos Town during the 2023/2024 academic year. According to records from the respective schools' administrative offices, the total number of students in these grades was 3,542, of whom 1,686 were male and 1,856 were female. These students were selected as the focus of the study because they are at an important stage of adolescence, when academic motivation, responsibility, and perceptions of school experiences can be meaningfully examined. The study was limited to students officially registered in Grades 9 and 10 during the regular academic program. These grade levels were selected because they represent the initial stage of secondary education, during which students are adapting to increased academic demands and developing the motivational and self-regulatory capacities necessary for academic achievement. Academic motivation and academic responsibility are particularly important during this transitional period, as they may shape students' subsequent educational trajectories and achievement. Students enrolled in Grades 11 and 12 were excluded because they face distinct academic and examination-related pressures associated with preparation for national examinations and post-secondary transitions, which may influence their motivation, responsibility, and achievement differently from students in lower secondary school. Limiting the study to Grades 9 and 10 therefore helped ensure a more homogeneous population and allowed for a clearer examination of the relationships among family-related factors, teachers' conscious discipline, students' intrapersonal factors, and academic achievement. From the total population, 546 students were selected to participate in the main study.

The sample size for this study was determined using the formula developed by Krejcie and Morgan (1970). This formula is widely used in social science research to determine an appropriate

sample size for a finite population at a specified confidence level and margin of error. According to Krejcie and Morgan (1970), the required sample size (s) is calculated using a formula that incorporates the population size (N), population proportion (P), degree of accuracy (d), and the chi-square value corresponding to the desired confidence level (x^2). The formula is computed as $S = (x^2NP(1-P)) / (d^2(N-1) + x^2P(1-P)$. In this formula, s represents the required sample size, x^2 denotes the table value of chi-square for one degree of freedom at the desired confidence level (3.841 for a 95% confidence level), N refers to the population size, P represents the population proportion (assumed to be 0.50 because it yields the maximum possible sample size), and d indicates the degree of accuracy expressed as a proportion (0.05).

In the present study, the total population consisted of 3,542 Grade 9 and Grade 10 students enrolled in four public secondary schools in Debre Markos town during the 2023/2024 academic year. Using the Krejcie and Morgan formula with a 95% confidence level and a 5% margin of error, the minimum sample size was 346 respondents. However, the final sample size also needed to account for the analytical method used in the study.

This study used a mediation model to examine indirect relationships among the variables. Mediation analysis typically requires larger samples than conventional regression models because the indirect effect is the product of two or more regression coefficients, which often yields smaller effect sizes and reduced statistical power. Consequently, researchers have emphasized the importance of larger samples when testing mediation effects to obtain stable and reliable estimates (MacKinnon, 2008).

Empirical and simulation-based studies further indicate that mediation models, particularly those with two or more mediators, generally require relatively large samples to achieve adequate statistical power. Fritz and MacKinnon (2007) demonstrated that detecting mediated effects often

requires sample sizes of approximately 300 to 500 participants, depending on the magnitude of the path coefficients. Similarly, Hayes (2018) noted that models involving parallel mediators require sufficiently large samples to ensure accurate estimation of indirect effects, especially when bootstrapping is used to test mediation effects.

Given these methodological recommendations and the complexity of the mediation model used in this study, the researcher increased the sample size beyond the minimum required by the Krejcie and Morgan formulas. Accordingly, 546 students were included in the final sample. This larger sample size was considered adequate to enhance statistical power, improve the stability of parameter estimates, and ensure the reliability and robustness of the results of the mediation analysis.

3.4.3. Sampling Technique

The study employed a multistage sampling approach, integrating simple random sampling and stratified sampling with proportional allocation. Multistage sampling was appropriate because the study population was hierarchically organized into schools, grade levels, sections, and individual students. This structure requires selecting samples in successive stages to ensure adequate representation of the target population (Cohen et al., 2018; Creswell, 2018). In the first stage, schools were selected using simple random sampling via the lottery method. Three schools were randomly drawn for the main study, while the remaining school, Ethio-Japan General Secondary School, was used for the pilot study. Random selection of clusters helps reduce selection bias and ensures that each school has an equal chance of being included in the study (Babbie, 2016). In the second stage, students in the selected schools were stratified by grade level, namely Grade 9 and Grade 10. Stratification ensured that students from both grade levels were adequately represented in the study sample, thereby improving the sample's representativeness and

precision (Ary et al., 2019). In the third stage, lists of classroom sections for Grade 9 and Grade 10 were obtained from each selected school. These lists included the number of students in each section and served as the sampling frame for the study. Identifying sections and their corresponding student populations was necessary to facilitate the proportional distribution of the sample across the various groups. In the fourth stage, the total sample size of 546 students was proportionally allocated across the selected schools and grade levels based on their respective population sizes. Proportional allocation ensures that groups with larger populations contribute a proportionally larger number of participants to the sample, thereby maintaining representativeness (Leedy & Ormrod, 2015). The allocation was determined using the proportional allocation formula: $n_i = (N_i / N) \times n$, where n_i represents the sample size for each group, N_i is the population size of each group, N is the total population (3,542), and n is the total sample size (546). In the fifth stage, the allocated sample for each grade level was further distributed proportionally across the classroom sections within the selected schools. Sections with larger numbers of students received a larger share of the sample, ensuring fair representation of students from different classrooms.

Finally, individual students were selected through simple random sampling from class rosters, with each student assigned a number and then chosen randomly (e.g., the lottery method), ensuring an equal probability of selection (Cochran, 1977).

3.5. Variables

This study involves three types of variables: exogenous, mediator, and endogenous.

The exogenous variables include (i) students' perceptions of teachers' use of conscious discipline, based on Bailey's model, which encompasses empathy, encouragement, positive intent, and composure; and (ii) family-related factors, specifically parenting styles and parental behaviors.

The mediator variables consist of (i) academic motivation, which includes intrinsic motivation to know, intrinsic motivation to accomplish, intrinsic motivation to experience stimulation, extrinsic motivation driven by external regulation, introjected regulation, identified regulation, and amotivation; and (ii) academic responsibility, which consists of two dimensions: Learning Responsibilities related to the Classroom (LRDC) and Learning Responsibilities related to Outside the Classroom (LROC).

The endogenous variable is the students' first-semester Average Achievement Score (AAS).

3.6. Data Collection Tools

3.6.1. Measures of Students' Perceptions of Teachers' Conscious Discipline

Students' perceptions of teachers' conscious discipline were assessed using the Perceived Teachers Conscious Discipline Scale (PTCDS), a researcher-developed instrument grounded in Bailey's (2015) Conscious Discipline framework. The scale was developed through a multistage process that included an extensive review of the literature on conscious discipline and teacher–student relationships, item generation, expert review for content validity, and subsequent psychometric validation. The initial version of the PTCDS consisted of 30 items representing theoretically derived dimensions of teachers' conscious discipline. Following exploratory factor analysis (EFA) and confirmatory factor analysis (CFA), 17 items were retained and grouped into four dimensions: empathy (4 items), encouragement (4 items), positive intent (3 items), and composure (6 items). Responses were recorded on a five-point Likert-type scale ranging from 1

(strongly disagree) to 5 (strongly agree). Subscale scores were calculated by averaging the responses to the items comprising each dimension, and an overall perceived teachers' conscious discipline score was obtained by averaging all 17 retained items. Higher scores indicate stronger student perceptions that their teachers demonstrate conscious discipline practices in the classroom. Internal consistency reliability for the retained subscales was satisfactory to excellent, with Cronbach's alpha coefficients of .91 for empathy, .87 for encouragement, .96 for positive intent, and .91 for composure.

The empathy dimension reflects the extent to which teachers demonstrate understanding and attentiveness to students' emotional and academic needs (e.g., "My teacher creates a classroom environment where everyone feels included and valued"). The encouragement dimension captures teachers' supportive behaviors that foster student confidence and growth (e.g., "I feel encouraged by my teacher to overcome challenges and persevere in my studies"). The positive intent dimension assesses students' perceptions of teachers' genuine care and concern for their well-being and academic achievement (e.g., "My teacher communicates with a positive and encouraging tone during class"). The composure dimension evaluates teachers' ability to maintain calm and self-regulation when managing classroom situations (e.g., "I observe that my teacher handles disruptions or unexpected events with a sense of control").

3.6.2. Measures of Family-Related Variables (Parenting Style & Parental Behavior)

3.6.2.1. Measures of Parenting Style

Parenting style was measured using the Adolescents' Perceived Parenting Style Scale (PPSS), developed and validated by Aemero (2015) for adolescents in the Amhara Region of Ethiopia. The instrument was designed to assess parenting behaviors from adolescents'

perspectives within the Ethiopian sociocultural context and to capture culturally relevant dimensions of parenting practices. The PPSS was developed using an exploratory sequential mixed-methods design. During the qualitative phase, focus group discussions with adolescents identified locally meaningful parenting behaviors. During the quantitative phase, the scale's psychometric properties were examined through item analysis, exploratory factor analysis (EFA), reliability analysis, and confirmatory factor analysis (CFA). The validation process was conducted among adolescents from government secondary and preparatory schools in the Amhara Region of Ethiopia. The final validated instrument consisted of 26 items organized into four dimensions: Reasonable (7 items), Decent (8 items), Pampering (6 items), and Autocratic (5 items) (Aemero, 2015).

In the present study, the complete 26-item PPSS was administered to assess students' perceptions of their parents' parenting styles. Each item was rated on a five-point Likert-type scale from 1 (Strongly Disagree) to 5 (Strongly Agree). Scores for each parenting style dimension were calculated by averaging responses within each dimension. Higher scores indicate stronger perceptions of the corresponding parenting style. Internal consistency reliability of the PPSS was examined in the current sample. Results showed excellent reliability across all dimensions, with Cronbach's alpha coefficients of .93 for Reasonable parenting, .90 for Decent parenting, .91 for Pampering parenting, and .92 for Autocratic parenting. The overall scale demonstrated good internal consistency ($\alpha = .80$), indicating that the PPSS was a reliable measure of students' perceptions of parenting styles in the present study.

3.6.2.2. Measures of Parental Behavior

Parental behavior was assessed using the short version of the Parental Behavior Scale (PBS) developed by Van Leeuwen and Vermulst (2010), which is based on the original PBS

developed by Van Leeuwen and Vermulst (2004). The original PBS consisted of 45 items representing nine dimensions of parental behavior. To improve efficiency while maintaining the core domains of parental practices, Van Leeuwen and Vermulst (2010) developed a short version consisting of 23 items across five dimensions: Positive Parenting, Rule Setting, Discipline, Harsh Punishment, and Material Rewarding.

The short PBS was adapted for the present study to assess students' perceptions of parental behaviors in the Ethiopian secondary school context. The instrument underwent psychometric evaluation using confirmatory factor analysis. After evaluating the factor structure and item performance, 20 items that met established statistical and theoretical criteria were retained for the final analysis. The retained items represented five dimensions: Positive Parenting (8 items), Rule Setting (4 items), Discipline (4 items), Harsh Punishment (2 items), and Material Rewarding (2 items). Each item was rated on a five-point Likert-type scale ranging from 1 (Strongly Disagree) to 5 (Strongly Agree). Subscale scores were calculated by averaging responses within each dimension. Higher scores indicate greater endorsement or frequency of the parental behavior represented by each dimension. Internal consistency reliability of the retained PBS dimensions was examined in the present study. Results showed satisfactory to excellent reliability, with Cronbach's alpha coefficients of .94 for Positive Parenting, .88 for Rule Setting, .87 for Discipline, .87 for Harsh Punishment, and .83 for Material Rewarding. The overall scale demonstrated acceptable reliability ($\alpha = .76$), indicating that the PBS was a reliable measure of students' perceptions of parental behaviors in the current sample.

3.6.3. Measures of Academic Motivation

Students' academic motivation was assessed with the 28-item Academic Motivation Scale (AMS-28), originally developed by Vallerand et al. (1992–1993) within Self-Determination

Theory. The AMS-28 measures students' reasons for engaging in academic activities by assessing intrinsic motivation, extrinsic motivation, and amotivation. The instrument has been widely used and validated across diverse educational contexts.

For the present study, the AMS-28 was adapted to the Ethiopian secondary school context. Minor modifications were made to ensure that item wording was culturally and educationally appropriate while preserving the original meaning of the constructs. The adapted instrument was reviewed for contextual appropriateness before administration. The AMS-28 consists of 28 items representing three broad dimensions of academic motivation: intrinsic motivation (12 items), extrinsic motivation (12 items), and amotivation (4 items). Intrinsic motivation includes three subdimensions: intrinsic motivation to know, intrinsic motivation toward accomplishment, and intrinsic motivation to experience stimulation, with four items measuring each. Extrinsic motivation includes identified regulation, introjected regulation, and external regulation, with four items representing each type. Amotivation is assessed using four items that reflect students' lack of intention or purpose regarding academic engagement.

Following the validation procedures in the present study, all 28 items were retained for the final analysis. Each item was rated on a five-point Likert-type scale ranging from 1 (Does not correspond at all) to 5 (Corresponds exactly). Subscale scores were calculated by averaging responses within each dimension. Higher scores indicate stronger endorsement of the corresponding type of academic motivation, whereas higher amotivation scores indicate greater lack of motivation toward academic activities. The reliability of the AMS-28 was examined using Cronbach's alpha coefficients. The subscales demonstrated acceptable internal consistency, with reliability coefficients reported in Table 2.

3.6.4. Measures of School Learning Responsibility Scale (SLRS)

Students' school learning responsibility was measured using the School Learning Responsibility Scale (SLRS) developed by Yeşil (2013). The SLRS was designed to assess students' responsibility for managing and engaging in their learning activities within the school context. The original scale consists of 24 items organized into two dimensions: Learning Responsibilities Related to During Class (LRDC) and Learning Responsibilities Related to Outside Class (LROC). The LRDC dimension assesses students' responsibility for active participation in classroom learning activities, whereas the LROC dimension evaluates students' responsibility for managing learning activities outside the classroom.

In this study, the SLRS was culturally adapted for Ethiopian secondary school students through a systematic translation and adaptation process. The original instrument was first translated from Turkish into English and then into Amharic, the language used by the participants. To ensure linguistic accuracy, conceptual equivalence, and cultural appropriateness, the translated version was carefully reviewed and refined before administration. The adapted instrument was then subjected to confirmatory factor analysis (CFA) to assess whether the original two-factor structure was appropriate for the Ethiopian student population. The CFA results supported the proposed factor structure, and all 24 items were retained for the final analysis. Each item was rated on a five-point Likert-type scale ranging from 1 (Strongly Disagree) to 5 (Strongly Agree). Subscale scores were calculated by averaging responses within each dimension, and the overall school learning responsibility score was obtained by averaging all 24 items. Higher scores indicate greater student responsibility for their learning activities during and outside classroom contexts.

The original validation study by Yeşil (2013) demonstrated strong internal consistency, with Cronbach's alpha coefficients of .88 for the LRDC dimension, .87 for the LROC dimension,

and .92 for the overall scale. In the present study, the reliability of the adapted SLRS was assessed using Cronbach's alpha, which indicated satisfactory internal consistency for measuring students' school learning responsibility (see Table 2).

3.6.5. Students' Average Achievement Score (AAS)

Students' Average Achievement Score (AAS) is the mean of a student's final scores across all subjects completed in the first semester of the academic year, as recorded in the official school academic records. It served as an indicator of students' overall academic performance during that semester. Higher average achievement scores indicated higher levels of academic achievement.

Students' academic achievement data were collected from the official school records maintained by the registrars of the respective secondary schools. Using official records was considered more reliable than relying on students' self-reported grades, as self-reported academic results may be affected by social desirability bias or inaccurate recall (Kuncel et al., 2005).

To ensure accurate matching between the questionnaire responses and the achievement data, each student's unique school identification (ID) number was used. Students recorded their school ID number on the questionnaire. These ID numbers were then used to retrieve the corresponding first-semester average achievement scores from the official school records. This procedure allowed the questionnaire data and the academic achievement scores to be accurately linked while maintaining the objectivity of the achievement measure.

3.7. Instrument Validations

3.7.1. Translation and Cultural Adaptation of Research Instruments

Adapting research instruments for use across linguistic and cultural contexts requires a rigorous methodological approach to ensure the accuracy and validity of translated measures. In this study, translation and adaptation procedures were guided by internationally recognized guidelines for the cross-cultural adaptation of self-report instruments. These guidelines, originally proposed by Leplege and Verdier and later expanded by Beaton and colleagues, outline a structured, multi-stage process to maintain equivalence between the original and adapted versions of the scale (Beaton et al., 2000). This approach has been widely applied in cross-cultural research and is internationally recognized as a reliable framework for adapting measurement instruments.

The translation and cross-cultural adaptation of the research instruments followed the methodological procedures recommended by Beaton et al. (2000) and other related guidelines. Initially, the original instrument was translated from the source language into the target language through a forward-translation process conducted independently by two bilingual translators proficient in both languages. One translator was familiar with the instrument's theoretical concepts and objectives, whereas the second had no prior knowledge of the instrument's purpose, helping reduce potential translation bias. Afterward, the two independently prepared versions were carefully compared and integrated into a single synthesized translation. This reconciliation process involved discussion among the translators and, where necessary, consultation with an additional reviewer to resolve differences and ensure conceptual consistency.

Next, the synthesized version was translated back into the original language by two independent translators fluent in both languages and with no prior exposure to the original

instrument. This back-translation stage was intended to verify the accuracy and equivalence of the translated version relative to the original instrument. Subsequently, an expert review committee comprising methodological experts, subject specialists, language professionals, and translators examined all translated versions of the instrument. The committee evaluated the translated items for semantic, idiomatic, experiential, and conceptual equivalence to ensure that the instrument retained its intended meaning across cultural contexts. After incorporating the necessary revisions based on the pretest results, the final version of the questionnaire was prepared for use in the main data collection process (Beaton et al., 2000; Brislin, 1970; Maneesriwongul & Dixon, 2004; Sousa & Rojjanasrirat, 2011; Wild et al., 2005).

3.7.1.1. Forward Translation

The first step in the cross-cultural adaptation process was translating the research instruments from the original language (English) into the target language (Amharic). This forward translation was performed independently by two bilingual translators whose native language was Amharic and who were highly proficient in both English and Amharic. Both translators were English language instructors at Bahir Dar University with more than a decade of university-level teaching experience. In addition, both translators were PhD candidates in educational psychology in the Department of Psychology at Bahir Dar University. Owing to this academic background, the translators had substantial knowledge of educational psychology theories and familiarity with psychological measurement tools, which helped ensure that the conceptual meaning of the items was preserved during translation.

In this phase, each translator worked independently to produce an Amharic version of the instruments from the original English questionnaires. No communication was allowed between the translators during translation. Independent translation by the two translators facilitated the

generation of alternative wordings, identification of potential ambiguities in the original items, and enhancement of both linguistic clarity and conceptual equivalence in the translated instruments before the synthesis stage (Beaton et al., 2000).

3.7.1.2. Synthesis of the Forward Translations

After completing the independent forward translations, the two Amharic versions of the instruments were carefully examined and merged into a single harmonized translation. This stage involved a systematic, item-by-item comparison to identify variations in wording, potential ambiguities, and inconsistencies in meaning. The translators, together with the researcher, discussed these differences and selected the most appropriate expressions that accurately reflected the intent of the original English items while remaining linguistically clear and culturally meaningful in Amharic. Throughout the discussion, attention was given to maintaining semantic accuracy, using suitable idiomatic expressions, ensuring relevance to the target population's cultural experiences, and preserving the theoretical meaning of the constructs measured by the instruments. When disagreements arose, they were resolved through collaborative deliberation and by referring back to the original English version to safeguard the intended meaning of each item. The result of this process was a single synthesized Amharic version that combined the most accurate and culturally appropriate elements from both translations. This version subsequently served as the basis for the back-translation stage, in line with recommended procedures for cross-cultural instrument adaptation (Beaton et al., 2000).

3.7.1.3. Backward Translation

After synthesizing the forward translations, the Amharic version of the instrument was independently back-translated into English by two bilingual TEFL instructors to verify accuracy and detect shifts in meaning. The translators, blinded to the original English version and with no

prior involvement in earlier stages, ensured that the back-translations reflected the synthesized version rather than the original wording. Comparing the back-translated and original versions helped identify discrepancies, minimize errors and biases, and confirm semantic, idiomatic, experiential, and conceptual equivalence for cross-cultural validity (Beaton et al., 2000). Any discrepancies identified during this comparison were recorded and later addressed during the expert committee review.

3.7.1.4. Expert Committee Review

After backward translation, an expert committee reviewed the instruments to ensure cross-cultural equivalence (Beaton et al., 2000). The synthesized Amharic version was evaluated by two study supervisors with expertise in developmental and educational psychology, research methodology, and psychological measurement. All versions of the instruments were reviewed to assess semantic, idiomatic, experiential, and conceptual equivalence, as well as cultural relevance and item clarity. The supervisors provided written feedback on item wording, cultural appropriateness, and alignment with the theoretical framework. Based on their recommendations, necessary revisions were made, resulting in finalized pre-final Amharic versions of the instruments, which were then ready for content validity assessment and pilot testing.

To ensure content and face validity, the measurement tools underwent an integrated assessment using qualitative and quantitative methods. A panel of six PhD students specializing in educational psychology at Bahir Dar University evaluated all components of the eight selected tools for cultural appropriateness, theoretical consistency, and clarity for the intended audience. Each expert independently rated the relevance and clarity of items on a four-point scale, and the Item-Level (I-CVI) and Scale-Level (S-CVI/Ave) Content Validity Indices were computed to assess agreement. Items deemed unclear or less relevant were revised or removed based on expert

input. The combination of qualitative evaluation and quantitative CVI measurement produced improved, near-final Amharic versions of the tools, ensuring that the items accurately reflected the theoretical constructs and were suitable for the study population's cultural context.

Experts evaluated item clarity, with item-level ratings ranging from 0.83 to 1.0. Scale-level CVI scores were high across all instruments: 0.99 for parenting style, 0.98 for parental behavior, 0.97 for academic motivation, 0.98 for learning responsibility, 0.97 for teachers' empathy, encouragement, and positive intent, and 0.98 for teachers' composure. These results indicate that most items were clear, and minor wording adjustments were made based on expert feedback to further clarify them. The summarized results are presented in Table 1 below.

Table 1: Content Validity Index (CVI)

Variables	Relevance		Clarity	
	I-CVI range	S-CVI /ave.	I-CVI range	S-CVI/ave.
1. Parenting Style	0.83 - 1.0	0.93	0.83 - 1.0	0.99
2. Parental Behavior	0.83 - 1.0	0.92	0.83 - 1.0	0.98
3. Academic Motivation	0.83 - 1.0	0.98	0.83 - 1.0	0.97
4. Academic Responsibility	0.83 - 1.0	0.99	0.83 - 1.0	0.98
5. Teachers' Empathy	0.83 - 1.0	0.98	0.83 - 1.0	0.97
6. Teachers' Encouragement	0.83 - 1.0	0.96	0.83 - 1.0	0.97
7. Teachers' Positive Intent	0.83 - 1.0	0.92	0.83 - 1.0	0.97

8. Teachers' Composure	0.83 - 1.0	0.97	0.83 - 1.0	0.98

Note: I-CVI = Item Level Content Validity Index; S-CVI = Scale Level Content Validity Index

3.7.2. Pilot Study

In this study, a questionnaire served as the primary data collection instrument, consisting of a structured set of questions designed to gather information from respondents. In survey-based research, conducting a pilot study is an important methodological step that helps researchers evaluate the clarity, feasibility, and effectiveness of the research instrument before the main study is implemented. Pilot testing enables researchers to identify potential problems, such as ambiguous wording, unclear instructions, or procedural difficulties, and to make necessary revisions to improve the quality of the instrument and the overall research design (Muasya & Mulwa, 2023; van Teijlingen & Hundley, 2002). Accordingly, a pilot study was conducted to refine the research tools and ensure their suitability for the target population. For this purpose, the instruments measuring students' perceptions of teachers' conscious discipline, family-related variables, academic motivation, and academic responsibility were administered to a sample of 220 students before the main data collection.

The pilot study sample size was determined using methodological recommendations that classify samples of about 100 as small, 100–200 as moderate, and more than 200 as large for structural equation modeling and factor analysis (Hair et al., 2019). Accordingly, a target sample of 220 students was selected for the pilot test. Given the likelihood of nonresponse or incomplete responses, particularly due to the personal nature of some survey items, an additional 10% was added to the sample size to account for potential data loss (Liu & Wronski, 2018). Thus, 220 students (125 males and 95 females) participated in the pilot study to examine the validity and reliability of the instruments and to conduct confirmatory factor analysis. After data screening,

responses from 205 participants (93.18%), aged 14 to 24 years (M = 16.53; SD = 1.67), were retained for analysis, while 15 questionnaires (6.8%) with incomplete responses were excluded.

The validation of the student-Perceived Teachers' Conscious Discipline scale followed a two-stage factor-analytic procedure. First, an Exploratory Factor Analysis (EFA) was conducted to examine the underlying structure of the constructs: empathy, encouragement, positive intent, and composure. Consistent with methodological recommendations that a sample of about 100 participants is acceptable for preliminary factor analysis, a pilot sample of 100 students was targeted (Hair et al., 2019). To account for potential incomplete responses, the sample size was increased by 10%, resulting in 110 participants for the EFA. This stage helped identify the factor structure and refine the measurement items.

After establishing the preliminary structure, a Confirmatory Factor Analysis (CFA) was conducted on a separate, independent sample of 220 students to validate the factor structure identified in the EFA. Using distinct samples for EFA and CFA is recommended to avoid overfitting and to provide stronger evidence for the construct validity of measurement models (Brown, 2015; Kline, 2016). The CFA was therefore conducted to assess the adequacy of the four-factor model of students' perceptions of teachers' conscious discipline and to evaluate the reliability and validity of the measurement model.

3.7.2.1. Measurement Model Evaluation

Assessing the model fit, validity, and reliability of the instruments measuring students' perceptions of teachers' conscious discipline, family-related factors, academic motivation, and academic responsibility is essential to ensure their suitability for the local context. Accordingly, this study conducted a comprehensive validation procedure that included Exploratory Factor

Analysis (EFA), Confirmatory Factor Analysis (CFA), reliability testing, and assessments of convergent and discriminant validity to evaluate the psychometric soundness of the measurement instruments.

i) Exploratory Factor Analysis (EFA)

The development and validation of the students' perceptions of teachers' conscious discipline scale followed standard procedures for psychometric scale construction. First, the construction specification was developed based on Bailey's (2015) theoretical framework, which conceptualizes students' perceptions of teachers' conscious discipline through four core dimensions: empathy, encouragement, positive intent, and composure. Based on these constructs, 30 items were initially generated to represent the scale's theoretical domains. After establishing content validity through expert review, the retained items were administered to participants to examine their psychometric properties. The data were entered and analyzed using IBM SPSS Statistics version 27. Before analysis, the dataset was screened for accuracy and completeness by examining minimum and maximum item scores, frequency distributions, and missing data. Following data screening, item analysis was conducted to evaluate item quality and discrimination. Several item statistics were examined, including inter-item correlations, corrected item–total correlations, item means, and Cronbach's alpha if an item were deleted. These procedures helped identify items that did not perform adequately and contributed to simplifying the factor structure.

Subsequently, Exploratory Factor Analysis (EFA) was conducted to examine the scale's underlying factor structure. The EFA was performed on responses from 110 students using Principal Axis Factoring (PAF) as the extraction method, followed by Varimax orthogonal rotation to obtain a simpler, more interpretable factor structure. Before the analysis, the assumptions

underlying factor analysis were assessed, including adequate sample size, linear relationships among variables, and the suitability of the correlation matrix. In addition, the data's suitability for factor analysis was confirmed using the Kaiser–Meyer–Olkin (KMO) measure of sampling adequacy and Bartlett's test of sphericity. The results indicated that the data were suitable for factor analysis, as the KMO value was .88, which is considered very good, and Bartlett's test of sphericity was statistically significant (χ^2 (136) = 909.277, $p < .001$).

Given that the scale was theoretically grounded in Bailey's (2014) model of teachers' conscious discipline, which conceptualizes four core dimensions (empathy, encouragement, composure, and positive intent), the factor structure was examined to determine whether the empirical data supported this predefined model. An Exploratory Factor Analysis using Principal Axis Factoring was conducted, and factor retention was evaluated using eigenvalues greater than 1.0 and inspection of the scree plot as supporting evidence. The results provided empirical support for the theorized four-factor structure, which accounted for 66.004% of the total variance. The eigenvalues and variance explained by each factor were 7.43 (43.69%), 2.41 (8.30%), 2.22 (7.18%), and 1.16 (6.83%), respectively.

During factor refinement, items with low factor loadings and cross-loadings were removed to enhance construct clarity. As a result, the scale was reduced from 30 to 17 items, distributed across four factors: empathy (4 items), encouragement (4 items), positive intent (3 items), and composure (6 items). The retained items showed satisfactory standardized factor loadings ranging from .58 to .84, indicating adequate representation of their latent constructs.

Finally, internal consistency reliability was assessed using Cronbach's alpha. The results indicated acceptable reliability across all four factors, with alpha values ranging from .76 to .86, demonstrating that the retained items consistently measured the intended constructs.

ii) Confirmatory Factor Analysis (CFA)

Before conducting Confirmatory Factor Analysis (CFA), the dataset was carefully examined to ensure data accuracy and quality. The screening process involved checking the frequency distributions of each variable and inspecting the minimum and maximum values of all items. The results indicated that the observed scores fell within the expected response range of the Likert scale (i.e., 1 to 5). In addition, no missing values were detected in the dataset, indicating that the data were complete and suitable for further analysis. Furthermore, the fundamental assumptions required for confirmatory factor analysis were assessed to verify the appropriateness of the data for model testing. These preliminary checks confirmed that the dataset satisfied the necessary conditions for conducting CFA.

After data screening and assumption checks, confirmatory factor analysis (CFA) was conducted to assess the fit of the proposed measurement models. Specifically, CFA evaluated several theoretically derived models, including a four-factor model of students' perceptions of teachers' conscious discipline, a four-factor parenting-style model, a five-factor parental-behavior model, a seven-factor academic-motivation model, and a two-factor academic-responsibility model. These factor structures were grounded in prior theoretical frameworks and empirical studies, and CFA was used to assess whether they adequately represented the relationships among the observed variables in the present sample.

Model Fit Statistics

The adequacy of the hypothesized measurement models was evaluated using several commonly recommended goodness-of-fit statistics and indices. In structural equation modeling (SEM) and confirmatory factor analysis (CFA), these indices provide statistical evidence of how well a proposed theoretical model reproduces the observed covariance matrix (Kline, 2016; Hu & Bentler, 1999). They help researchers assess whether the hypothesized model offers an acceptable representation of the relationships among observed variables (Byrne, 2016).

Traditionally, the chi-square (χ^2) goodness-of-fit test has been used to assess overall model fit by comparing the observed and model-implied covariance matrices. However, the chi-square statistic is well known for its high sensitivity to sample size and minor model misspecifications; with large samples, even trivial differences may yield statistically significant χ^2 values (Byrne, 2016; Kline, 2016). For this reason, researchers commonly supplement the chi-square statistic with additional fit indices to provide a more robust evaluation of model adequacy (Collier, 2020).

Consistent with widely accepted recommendations in the structural equation modeling literature, several indices were used to assess the fit of the measurement models, including the Goodness-of-Fit Index (GFI), Normed Fit Index (NFI), Comparative Fit Index (CFI), and the Root Mean Square Error of Approximation (RMSEA). These indices provide different perspectives on model fit: GFI reflects the proportion of variance in the estimated population covariance accounted for; NFI and CFI compare the proposed model with a baseline independence model; and RMSEA evaluates the degree of approximation error in the population (Hooper et al., 2008; Hu & Bentler, 1999; Kline, 2016).

According to widely accepted guidelines in the literature, a measurement model is generally considered to fit adequately when the following criteria are met: (a) a non-significant chi-square statistic ($p > .05$) and a χ^2/df ratio less than 3; (b) GFI, NFI, and CFI values of at least .90; and (c) RMSEA values below .08, indicating an acceptable level of approximation error (Collier, 2020; Hooper et al., 2008; Kline, 2016). These standards are widely used in confirmatory factor analysis and structural equation modeling to assess whether a theoretical model adequately represents the observed data.

Using the criteria outlined above, the results of the CFA conducted on the pilot data showed the following model fit measures:

Confirmatory Factor Analysis of Students' Perceptions of Teachers' Conscious Discipline Scale

Model fit was evaluated using a set of commonly recommended goodness-of-fit indices, consistent with established guidelines (e.g., Collier, 2020; Kline, 2016). These included the Root Mean Square Error of Approximation (RMSEA) and the Standardized Root Mean Square Residual (SRMR), with values of .08 or lower indicating acceptable fit, and the Tucker–Lewis Index (TLI) and Comparative Fit Index (CFI), with values of .90 or higher considered satisfactory. In addition, the chi-square-to-degrees-of-freedom ratio (χ^2/df) was examined, with values below 3.0 considered acceptable.

The four-factor measurement model of perceived teachers' conscious discipline was further evaluated using multiple fit indices, including χ^2/df, the Goodness-of-Fit Index (GFI), Normed Fit Index (NFI), CFI, and RMSEA. The findings indicated that the model fit the data well.

Specifically, the χ^2/df ratio was 1.70 (χ^2 = 233.92, df = 136), well below the more conservative threshold of 3.0, indicating a good fit. Moreover, the remaining indices supported this conclusion, with GFI = .91, NFI = .92, CFI = .96, and RMSEA = .048, all of which fall within the recommended criteria for a well-fitting model.

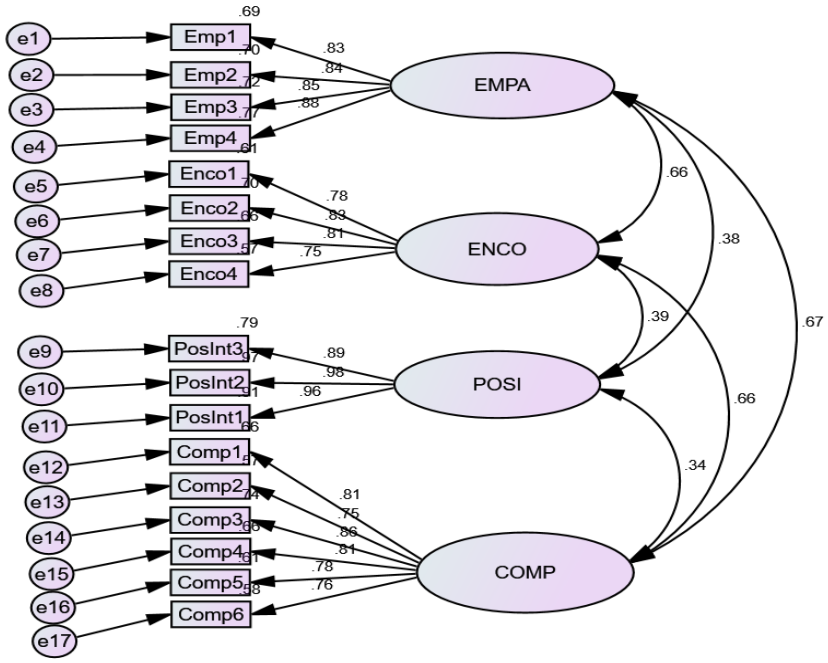

Figure 2. Confirmatory factor analysis of the four-factor students' perceptions of teachers' conscious discipline measurement model (n = 220).

Confirmatory Factor Analysis of Parenting Style Scale

The adequacy of the four-factor parenting style measurement model was evaluated using several goodness-of-fit statistics, including the chi-square test, the chi-square-to-degrees-of-freedom ratio (χ^2/df), and key fit indices such as the Goodness-of-Fit Index (GFI), Normed Fit

Index (NFI), Comparative Fit Index (CFI), and Root Mean Square Error of Approximation (RMSEA).

The results indicated that the model fit the data well. Specifically, the χ^2/df ratio was 1.61 (χ^2 = 361.2, df = 225), below the recommended cutoff of 3.0, indicating an acceptable level of fit. Furthermore, the fit indices for the adapted parenting style scale were within recommended thresholds, with GFI = .92, NFI = .96, CFI = .94, and RMSEA = .026. Overall, these findings suggest that the model fits the observed data well. The confirmatory factor analysis (CFA) results support the measurement structure, indicating that the observed items are appropriate indicators of their respective latent constructs.

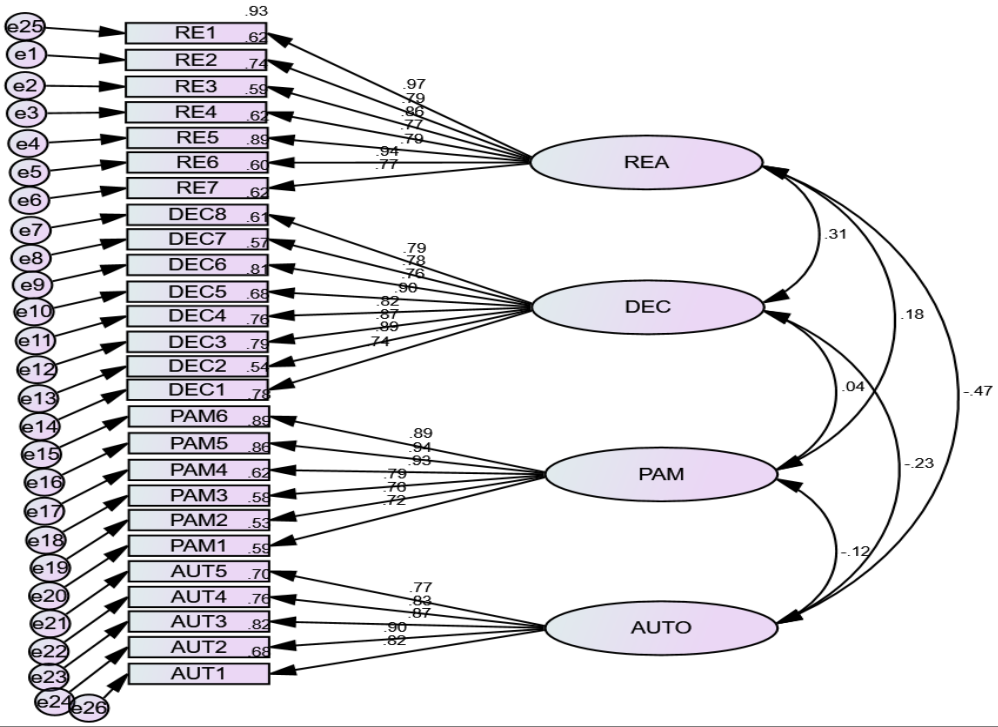

Figure 3. Confirmatory factor analysis of the four-factor parenting style measurement model (n = 220).

Confirmatory Factor Analysis of Parental Behavior Scale

The adequacy of the five-factor parental behavior measurement model was evaluated using the chi-square test, multiple fit indices (GFI, NFI, CFI, and RMSEA), and the chi-square/df ratio. The results showed a chi-square/df ratio of 2.21 (χ^2 = 172.2, df = 78), below the recommended threshold of 3, indicating acceptable model fit. Additionally, the fit indices for the adapted parental behavior scale were satisfactory (GFI = .92, NFI = .94, CFI = .96, RMSEA = .034), providing further evidence of good model fit. Overall, the CFA results supported the measurement model, indicating that the observed items reliably represented their latent constructs.

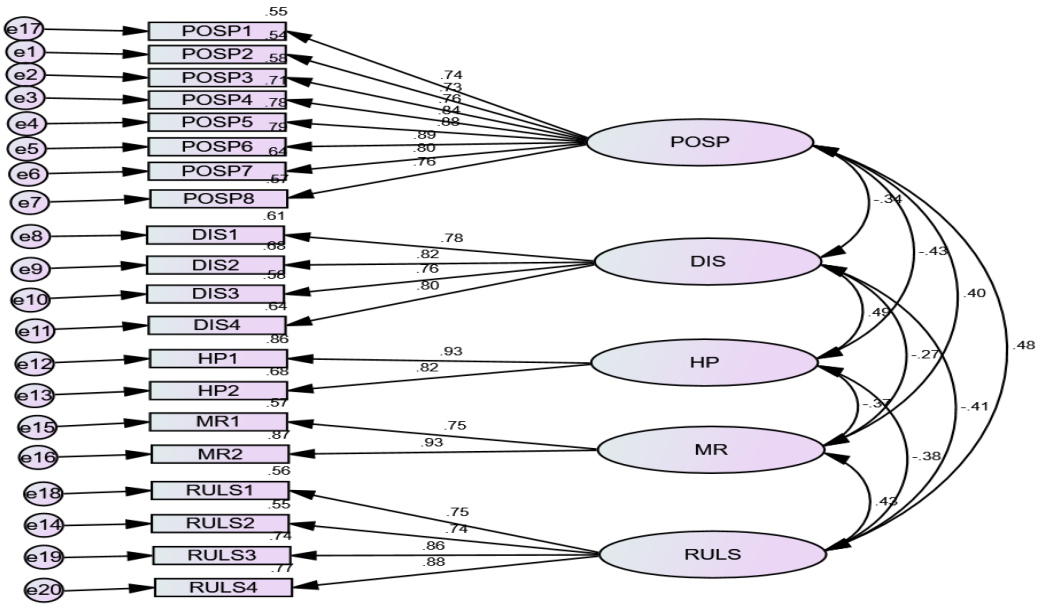

Figure 4. Confirmatory factor analysis of the five-factor parental behavior measurement model (n= 220).

Confirmatory Factor Analysis of the Academic Motivation Scale

The goodness of fit of the seven-factor academic motivation measurement model was evaluated using the chi-square statistic, several fit indices (GFI, NFI, CFI, and RMSEA), and the

chi-square/df ratio. The findings showed a chi-square/df ratio of 1.55 ($\chi^2 = 426.9$, df = 276), below the recommended cutoff of 3, indicating satisfactory model fit. Moreover, the fit indices for the adapted academic motivation scale indicated strong adequacy, with GFI = .91, NFI = .92, CFI = .93, and RMSEA = .048, all supporting a well-fitting model. Overall, the CFA results provided evidence of the measurement model's validity, suggesting that the observed indicators appropriately captured their respective latent constructs.

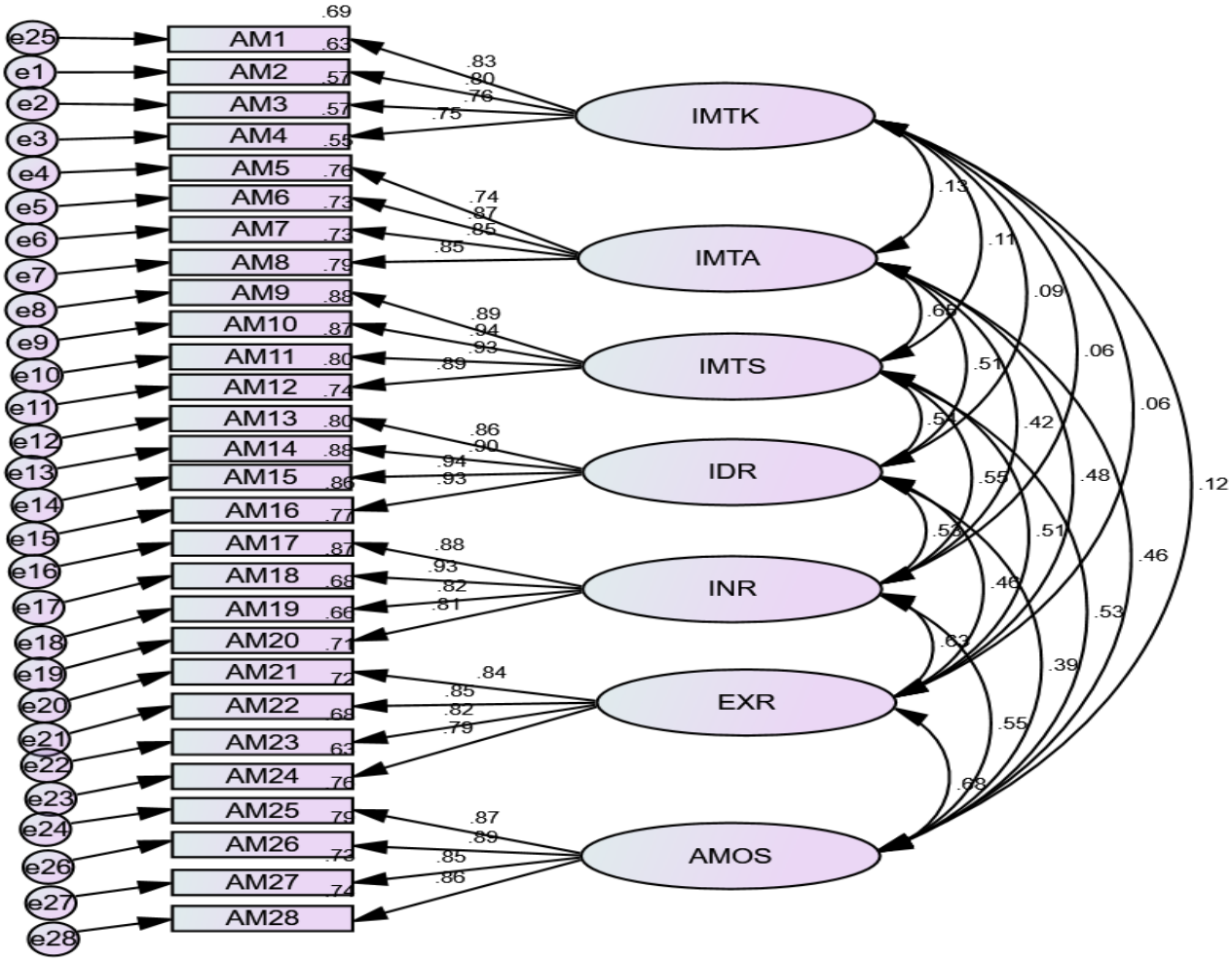

Figure 5. Confirmatory factor analysis of the seven-factor academic motivation measurement model (n = 220).

Confirmatory Factor Analysis of the Academic Responsibility Scale

The adequacy of the two-factor academic responsibility measurement model was evaluated using the chi-square statistic, key fit indices (GFI, NFI, CFI, and RMSEA), and the chi-square/df ratio. The findings indicated a chi-square/df value of 2.41 ($\chi^2 = 424.1$, df = 176), well below the recommended cutoff of 3, suggesting acceptable model fit. Furthermore, the fit indices for the

adapted academic responsibility scale showed satisfactory values (GFI = .91, NFI = .94, CFI = .922, RMSEA = .046), providing additional evidence of a good fit between the model and the observed data. Overall, the CFA results supported the measurement aspect of the proposed model, indicating that the observed items effectively represented their respective latent constructs.

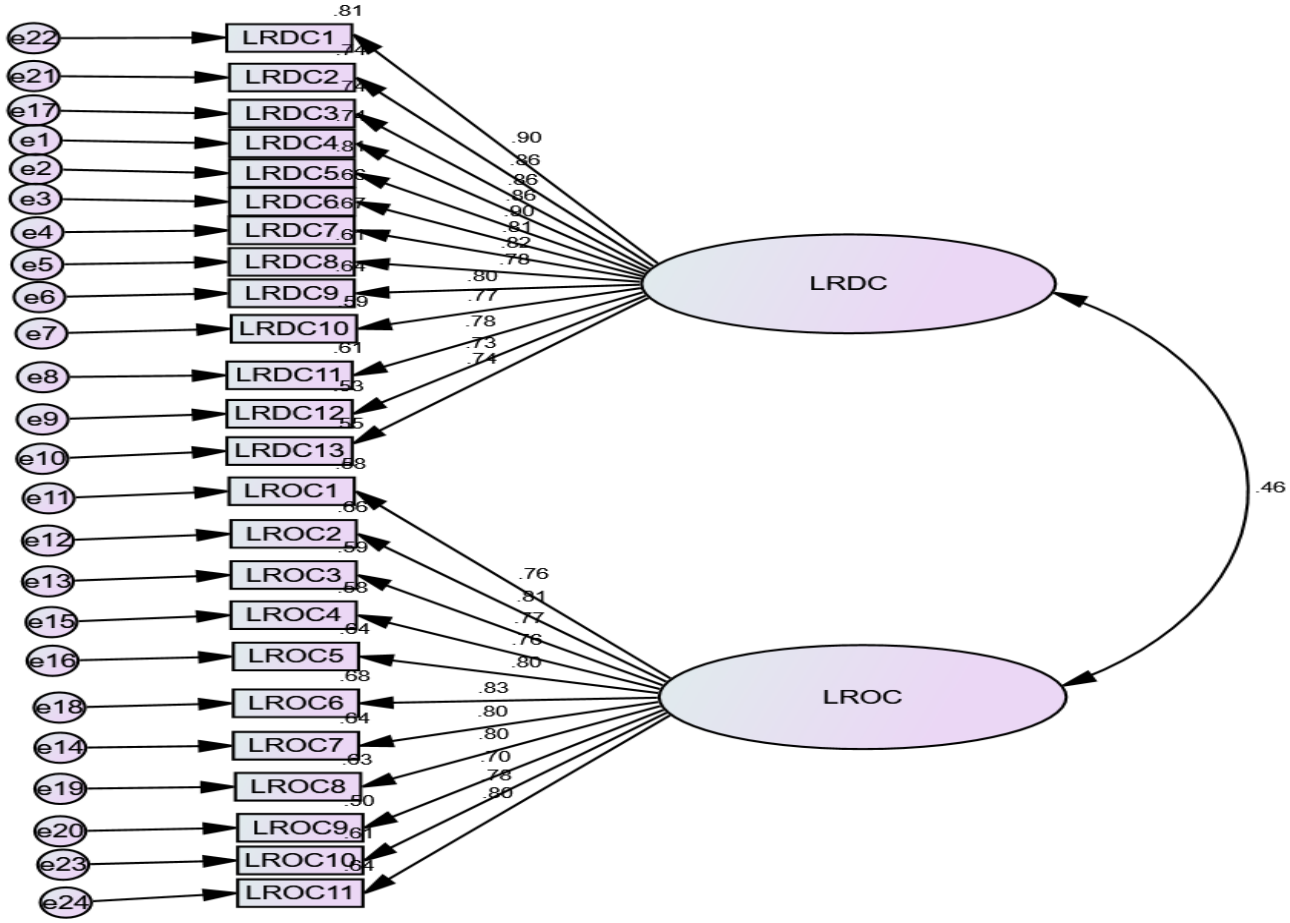

Figure 6. Confirmatory factor analysis of the two-factor academic responsibility measurement model (n = 220).

iii) Evaluation of the Second-Order Measurement Model

Confirmatory Factor Analysis (CFA) was conducted to evaluate the adequacy of the study's measurement model and to assess how well the observed indicators represented their respective

latent constructs. The analysis examined the factor structure validity of the major study variables, including parenting style, parental behavior, students' perceptions of teachers' conscious discipline, academic motivation, and academic responsibility. Because student-perceived teachers' conscious discipline was theoretically conceptualized as a multidimensional higher-order construct comprising empathy, encouragement, composure, and positive intent, a second-order CFA was conducted to determine whether these first-order factors loaded onto a single higher-order latent factor. Conducting a second-order CFA was theoretically and methodologically important because it enabled assessment of the construct's hierarchical structure and tested whether the interrelated first-order dimensions could be meaningfully explained by a single higher-order factor representing students' perceptions of teachers' conscious discipline. This approach strengthens both the conceptual clarity and empirical strength of the measurement model by demonstrating that the dimensions function collectively as components of an overarching construct rather than as isolated factors.

The measurement model was estimated using Maximum Likelihood (ML) with a sample of N = 496 secondary school students. The sample size substantially exceeded the minimum recommended ratio of 10–15 cases per estimated parameter, ensuring adequate statistical power for stable parameter estimation and reliable model evaluation. Model adequacy was evaluated using multiple goodness-of-fit indices recommended in contemporary Structural Equation Modeling literature, including the Goodness-of-Fit Index (GFI), Adjusted Goodness-of-Fit Index (AGFI), Normed Fit Index (NFI), Comparative Fit Index (CFI), Root Mean Square Error of Approximation (RMSEA), and the chi-square to degrees of freedom ratio (χ^2/df). Following widely accepted guidelines (Hu & Bentler, 1999; Kline, 2016), GFI, AGFI, NFI, and CFI values of .90 or higher are considered indicative of acceptable model fit. In contrast, RMSEA values below .06

suggest excellent fit, whereas values below .08 indicate acceptable fit. The chi-square to degrees of freedom ratio is emphasized over the chi-square statistic alone because the latter is highly sensitive to sample size. A χ^2/df ratio below 3 is generally regarded as indicative of acceptable model fit (Hatcher, 1994; Kline, 2005). In addition, a non-significant chi-square value ($p > .05$) provides supplementary evidence of model fit; however, it should not be considered the sole criterion for model evaluation because of its sensitivity to sample size (Kline, 2016).

Based on these criteria, the CFA results and the evaluation of the second-order measurement model for the study variables are presented in the next section.

Second-Order Confirmatory Factor Analysis of Students' Perceptions of Teachers' Conscious Discipline

The fit of the four-factor student-perceived teachers' conscious discipline measurement model was evaluated using the chi-square-to-degrees-of-freedom ratio (χ^2/df) and several goodness-of-fit indices, including the Goodness-of-Fit Index (GFI), Normed Fit Index (NFI), Comparative Fit Index (CFI), and Root Mean Square Error of Approximation (RMSEA). The results indicated acceptable model fit, with a χ^2/df of 83 ($\chi^2 = 354.50$, df = 125), below the recommended cutoff of 3.00. In addition, the fit indices demonstrated satisfactory model adequacy (GFI = .91, NFI = .92, CFI = .92, RMSEA = .068), all within commonly accepted thresholds. These findings suggest that the measurement model adequately represented the underlying latent constructs and provided empirical support for the validity of the perceived teachers' conscious discipline scale.

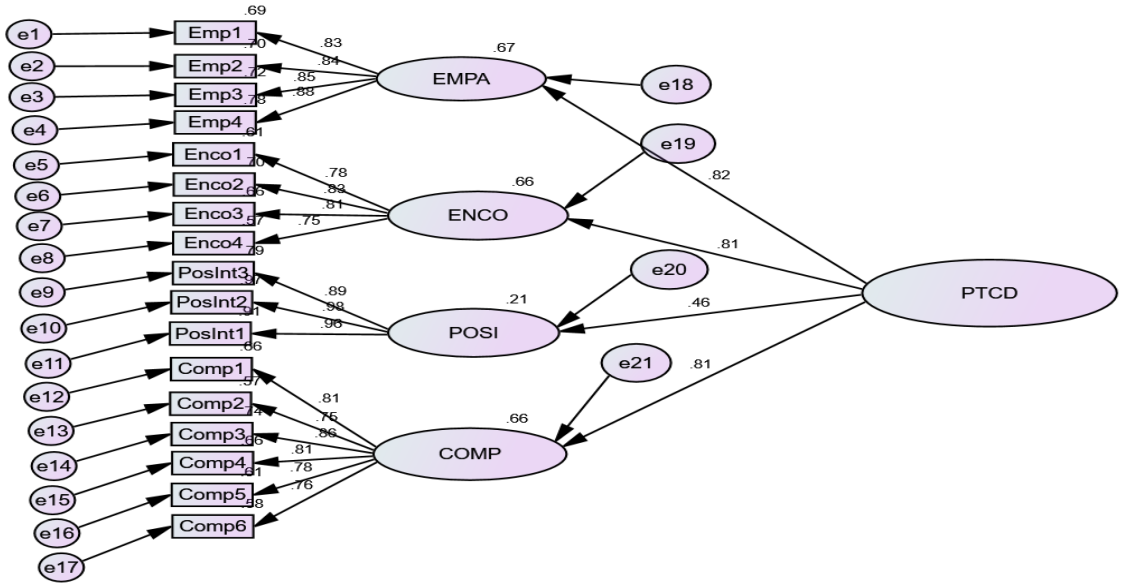

Figure 7. Second-Order Measurement Model for Perceived Teachers' Conscious Discipline (PTCD) With Four First-Order Latent Components and Standardized Coefficients (n = 496).

Second-Order Confirmatory Factor Analysis of Parenting Style

The adequacy of the four-factor parenting style measurement model was evaluated using the chi-square-to-degrees-of-freedom ratio (χ^2/df) and multiple model fit indices, including the Goodness-of-Fit Index (GFI), Normed Fit Index (NFI), Comparative Fit Index (CFI), and Root Mean Square Error of Approximation (RMSEA). The analysis yielded a χ^2/df ratio of 2.47 (χ^2 = 405.56, df = 164), which is below the recommended threshold of 3.00 and therefore indicates acceptable model fit. In addition, the goodness-of-fit indices provided evidence of the model's adequacy (GFI = .91, NFI = .93, CFI = .94, RMSEA = .058), with all values falling within the recommended acceptable ranges. These findings provide evidence for the construct validity of the measurement model and indicate that the observed indicators adequately reflect the underlying latent constructs.

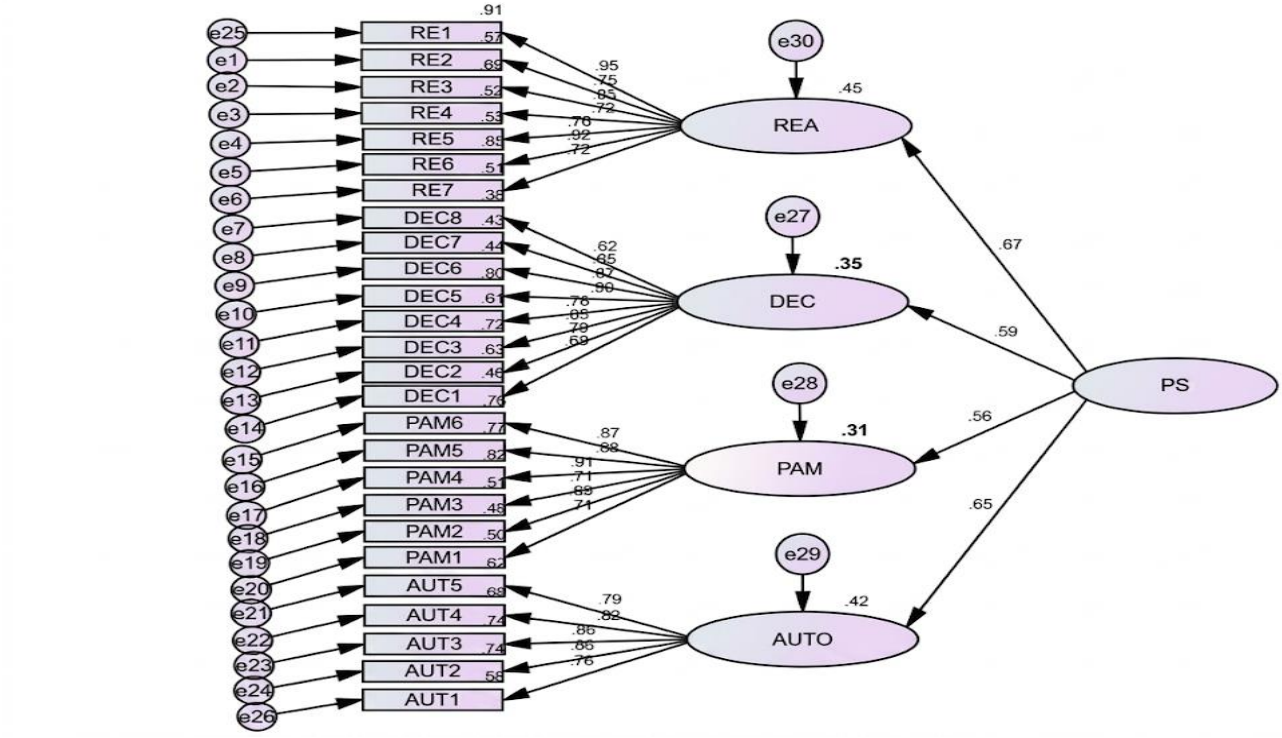

Figure 8. Second-Order Measurement Model for Parenting Style (PS) With Four First-Order Latent Components and Standardized Coefficients (n = 496).

Second-Order Confirmatory Factor Analysis of Parental Behavior

The fit of the five-factor parental behavior measurement model was evaluated using the chi-square-to-degrees-of-freedom ratio (χ^2/df) and several goodness-of-fit indices, including the Goodness-of-Fit Index (GFI), Normed Fit Index (NFI), Comparative Fit Index (CFI), and Root Mean Square Error of Approximation (RMSEA). The findings indicated acceptable model fit, with a χ^2/df of 2.74 (χ^2 = 238.18, df = 87), below the recommended threshold of 3.00. In addition, the fit indices demonstrated satisfactory model adequacy (GFI = .92, NFI = .94, CFI = .96, RMSEA = .056), all within acceptable ranges. These results provide empirical support for the validity of the measurement model and confirm that the observed items adequately represent the underlying latent constructs.

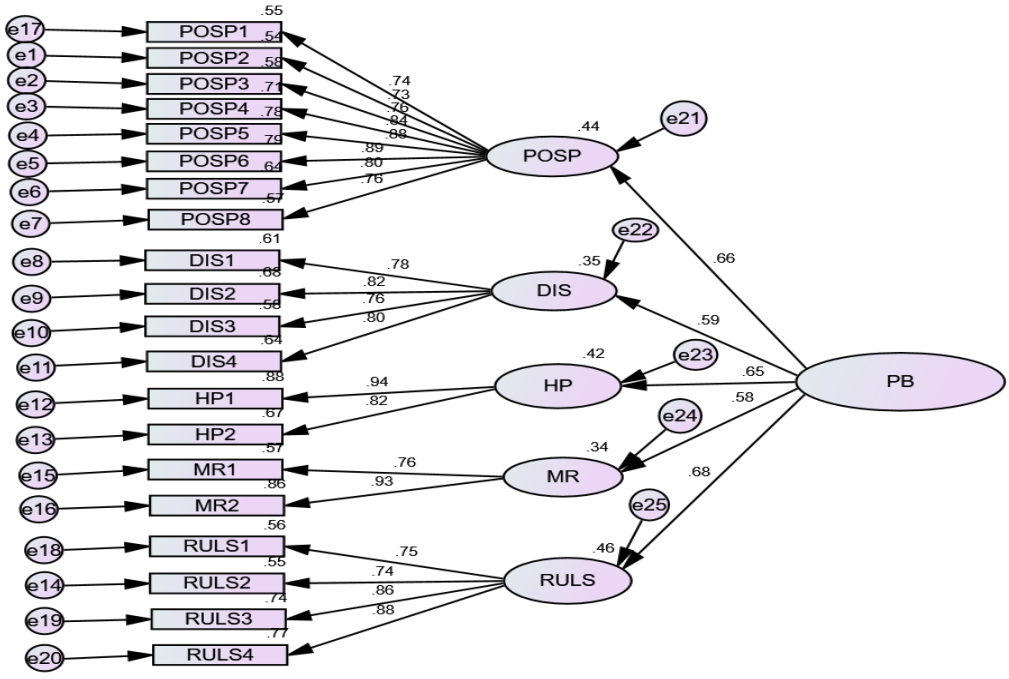

Figure 9. Second-Order Measurement Model for Parental Behavior (PB) With Five First-Order Latent Components and Standardized Coefficients (n = 496).

Second-Order Confirmatory Factor Analysis of Academic Motivation

The fit of the seven-factor academic motivation measurement model was evaluated using the chi-square-to-degrees-of-freedom ratio (χ^2/df) and several goodness-of-fit indices, including the Goodness-of-Fit Index (GFI), Normed Fit Index (NFI), Comparative Fit Index (CFI), and Root Mean Square Error of Approximation (RMSEA). The results indicated acceptable model fit, with a χ^2/df of 2.21 (χ^2 = 788.06, df = 356), below the recommended cutoff of 3.00. The fit indices also indicated satisfactory model adequacy (GFI = .92, NFI = .94, CFI = .94, RMSEA = .054), all within commonly accepted thresholds. These findings support the validity of the measurement model and confirm that the observed items adequately represent the underlying latent constructs.

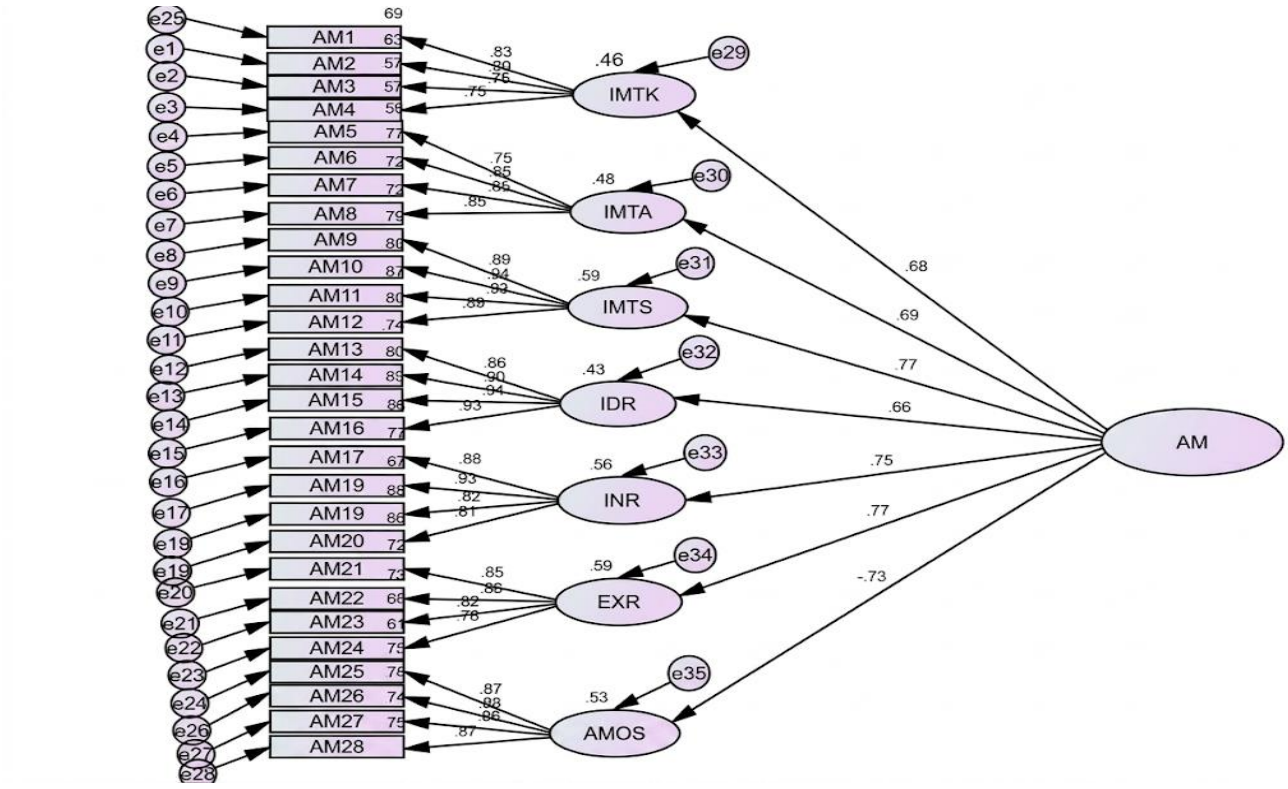

Figure 10. Second-Order Measurement Model for Academic Motivation (AM) With Seven First-Order Latent Components and Standardized Coefficients (n = 496).

iv) Assessment of Reliability

To ensure the reliability of the measurement instruments, this study employed Cronbach's alpha as an index of internal consistency, which assesses the extent to which items within a scale consistently represent the same underlying construct (Cronbach, 1951). In addition, composite reliability (CR) was used because it is particularly suitable for structural equation modeling (SEM) and accounts for the varying contributions of individual factor loadings when estimating construct reliability (Fornell & Larcker, 1981). Values of .70 or higher for both Cronbach's alpha and composite reliability are generally considered acceptable, indicating adequate internal consistency among the measurement items (Chan & Idris, 2017; Hair et al., 2017). These reliability indices confirmed that the instrument demonstrated satisfactory reliability, thereby supporting the accurate

assessment of perceived teachers' conscious discipline, parenting style, parental behavior, academic motivation, and academic responsibility among secondary students in Ethiopia.

In this study, the internal consistency of the measurement instruments was evaluated using Cronbach's alpha and composite reliability (CR). Coefficients ranged from .76 to .96, indicating satisfactory to excellent reliability across all latent constructs. The Perceived Teachers' Conscious Discipline (PTCD) scale demonstrated strong reliability. Cronbach's alpha and CR values were .91 for empathy, .87 for encouragement, .96 for positive intent, and .91 for composure, with an overall coefficient of .93 for the total PTCD scale. Similarly, the Parenting Style (PS) scale showed acceptable to good reliability, with coefficients of .93 for reasoning (CR = .94), .90 for decent parenting (CR = .94), .91 for pampering (CR = .94), and .92 for autocratic style. The overall reliability for the total scale was .80.

The Parental Behavior (PB) scale also showed adequate internal consistency. Coefficients were .94 for positive parenting, .87 for discipline, .87 for harsh punishment, .83 for material rewarding, and .88 for rule setting, with an overall reliability of .76 for the total scale. For the Academic Motivation (AM) scale, reliability was adequate to strong across its dimensions. Coefficients were .87 for intrinsic motivation to know, .90 for intrinsic motivation toward accomplishment, .95 for intrinsic motivation to experience stimulation, .95 for external regulation (CR = .90), .92 for identified regulation (CR = .95), .90 for introjected regulation (CR = .95), and .92 for amotivation. The overall reliability for the total AM scale was .94. Finally, the Academic Responsibility (AR) scale demonstrated excellent reliability, with coefficients of .96 for learning responsibility during class and .95 for learning responsibility outside the classroom, and an overall reliability of .96 for the total scale (see Table 2).

v) Assessment of Convergent and Discriminant Validity

Construct validity, encompassing both convergent and discriminant validity, is essential for establishing the extent to which a measurement instrument accurately captures the theoretical constructs it is intended to assess (Hair et al., 2019). In the present study, construct validity was examined for the scales measuring Perceived Teachers Conscious Discipline (PTCD), Parenting Style (PS), Parental Behavior (PB), Academic Motivation (AM), and Academic Responsibility (AR) among Ethiopian secondary school students, to support the hypothesized relationships among these variables and their influence on academic achievement. Convergent validity refers to the degree to which multiple indicators of a construct share a high proportion of common variance, indicating that they effectively represent the same underlying concept. In contrast, discriminant validity assesses the extent to which constructs are empirically distinct from one another (Fornell & Larcker, 1981). To evaluate these forms of validity, Confirmatory Factor Analysis (CFA) was conducted to assess the adequacy of the measurement model, and Average Variance Extracted (AVE) was used to determine the amount of variance captured by each construct relative to measurement error. Additionally, Varimax rotation was applied during the scale development phase to enhance the clarity and interpretability of the factor structure (Tabachnick & Fidell, 2013).

Convergent validity

Convergent validity was evaluated using the Average Variance Extracted (AVE), which reflects the mean variance shared between a construct and its indicators and is computed from the squared standardized factor loadings (Hair et al., 2019). An AVE above .50 indicates that the construct explains more variance in its observed variables than measurement error, supporting adequate convergent validity (Henseler et al., 2015). As shown in Table 5, all constructs demonstrated satisfactory convergent validity. The student-Perceived Teachers Conscious

Discipline (PTCD) subdimensions (empathy, encouragement, positive intent, and composure) yielded AVE values from .63 to .89. For Parenting Style (PS), the dimensions of reasoning, decent parenting, pampering, and autocratic style showed AVE values between .68 and .71. Similarly, the Parental Behavior (PB) dimensions (positive parenting, discipline, harsh punishment, material rewarding, and rule-setting) fell within the range of .62 to .77. The Academic Motivation (AM) subscales, including intrinsic motivation to know, toward accomplishment, to experience stimulation, external regulation, identified regulation, introjected regulation, and amotivation, revealed AVE values ranging from .62 to .84. In addition, the Academic Responsibility (AR) dimensions (responsibility during classroom activities and responsibility outside the classroom) produced AVE values between .61 and .67. Furthermore, the Confirmatory Factor Analysis (CFA) indicated that all standardized factor loadings were statistically significant, ranging from .61 to .89 across the constructs. These findings provide strong support for the adequacy of the measurement model and confirm that the observed indicators reliably represent their respective latent constructs (see Table 2).

Table 2: Measurement Model: Factor Loadings, Reliability, and Convergent Validity

Constructs	**Items**	**λ**	**α (>.7)**	**CR (>.7)**	**AVE (>.5)**
Students' Perceptions of Teachers' Conscious Discipline					
Empathy	Emp1	.83	.91	.91	.72
	Emp2	.84			
	Emp3	.85			
	Emp4	.88			
Encouragement	Enco1	.78	.87	.87	.63
	Enco2	.83			
	Enco3	.81			
	Enco4	.75			
Positive Intent	PosInt1	.89	.96	.96	.89
	PosInt2	.98			
	PosInt3	.96			
	Comp1	.81	.91	.91	.63

Composure	Comp2	.75			
	Comp3	.86			
	Comp4	.81			
	Comp5	.78			
	Comp6	.76			
Parenting Style					
Reasoning	RE1	.97	.93	.94	.71
	RE2	.79			
	RE3	.86			
	RE4	.77			
	RE5	.79			
	RE6	.94			
	RE7	.77			
Decent	DEC1	.79	.90	.94	.68
	DEC2	.78			
	DEC3	.76			
	DEC4	.90			
	DEC5	.82			
	DEC6	.87			
	DEC7	.89			
	DEC8	.74			
Pampering	PAM1	.89	.91	.94	.71
	PAM2	.94			
	PAM3	.93			
	PAM4	.79			
	PAM5	.76			
	PAM6	.72			
Autocrat	AUT1	.77	.91	.92	.70
	AUT2	.83			
	AUT3	.87			
	AUT4	.90			
	AUT5	.82			
Parental Behavior					
Positive Parenting	POSP1	.74	.94	.94	.64
	POSP2	.73			
	POSP3	.76			
	POSP4	.84			
	POSP5	.88			
	POSP6	.89			
	POSP7	.80			
	POSP8	.76			
	DIS1	.78	.87	.87	.62

Discipline	DIS2	.82			
	DIS3	.76			
	DIS4	.80	.87	.87	.77
Harsh Punishment	HP1	.93			
	HP2	.82			
Material Rewarding	MR1	.75	.82	.83	.71
	MR2	.93			
Rule Setting	RULS1	.75	.88	.88	.66
	RULS2	.74			
	RULS3	.86			
	RULS4	.88			
Academic Motivation					
Intrinsic motivation to know (IMTK)	IMTK1	.83	.87	.87	.62
	IMTK2	.80			
	IMTK3	.76			
	IMTK4	.75			
Intrinsic motivation toward the accomplishment (IMTA)	IMTA1	.74	.90	.90	.68
	IMTA2	.87			
	IMTA3	.85			
	IMTA4	.85			
Intrinsic motivation to experience stimulation (IMTS)	IMTS1	.89	.95	.95	.83
	IMTS2	.94			
	IMTS3	.93			
	IMTS4	.89			
Identified regulation (IDR)	IDR1	.86	.95	.95	.83
	IDR2	.90			
	IDR3	.94			
	IDR4	.93			
Introjected regulation (INR)	INR1	.88	.92	.95	.84
	INR2	.93			
	INR3	.82			
	INR4	.81			
External regulation (EXR)	EXR1	.84	.90	.90	.68
	EXR2	.85			
	EXR3	.82			
	EXR4	.79			
Amotivation (AMOS)	AMOS1	.87	.92	.92	.75
	AMOS2	.89			
	AMOS3	.85			
	AMOS4	.86			
Academic Responsibility					
	LRDC1	.90	.96	.96	.67

Learning Responsibility During Class	LRDC2	.86			
	LRDC3	.86			
	LRDC4	.86			
	LRDC5	.90			
	LRDC6	.81			
	LRDC7	.82			
	LRDC8	.78			
	LRDC9	.80			
	LRDC10	.77			
	LRDC11	.78			
	LRDC12	.73			
	LRDC13	.74			
Learning Responsibility Outside Class	LROC1	.76	.95	.95	.61
	LROC2	.81			
	LROC3	.77			
	LROC4	.76			
	LROC5	.80			
	LROC6	.83			
	LROC7	.80			
	LROC8	.80			
	LROC9	.70			
	LROC10	.78			
	LROC11	.80			

Note. λ = standardized factor loading; α = Cronbach's Alpha; CR = composite reliability; AVE = average variance extracted.

Discriminant validity

Discriminant validity was evaluated using the Fornell–Larcker criterion by comparing the Average Variance Extracted (AVE) values with the squared inter-construct correlations (r^2). The results indicated that the AVE values for all constructs exceeded their respective highest shared variances with other constructs (Fornell & Larcker, 1981). As presented in Table 3, all constructs satisfied this criterion. For Perceived Teachers Conscious Discipline (PTCD), the squared correlations among its dimensions ranged from .103 to .371, which were lower than their respective AVE values (.629 to .891). For parenting style, squared correlations among dimensions

(e.g., Autocratic and reasoning: $.426^2 = .181$; decent and reasoning: $.280^2 = .078$) were below the AVE values (.674 to .714). Similarly, for parental behavior, squared correlations (e.g., Positive parenting and rule setting: $.461^2 = .213$; discipline and harsh punishment: $.432^2 = .187$) were less than the AVE values (.625 to .769). In the case of academic motivation, squared correlations (e.g., Intrinsic motivation toward accomplishment and intrinsic motivation to stimulation: $.608^2 = .370$; external regulation and amotivation: $-.625^2 = .391$) were lower than the AVE values (.617 to .842). Finally, for academic responsibility, the squared correlation between learning responsibility during class and outside class ($.447^2 = .200$) was also below the AVE values (.669 and .614). These results collectively confirm that all constructs are distinct and demonstrate adequate discriminant validity, supporting the validity of the measurement model.

Table 3: Discriminant Validity Analysis

Students' Perceptions of Teachers' Conscious Discipline				
Inter-construct correlations	1	2	3	4
1. Empathy	1			
2. Encouragement	.597**	1		
3. Positive Intent	.367**	.372**	1	
4. Composure	.609**	.605**	.321**	1
Parenting Style				
Inter-construct correlations	1	2	3	4
1. Autocratic	1			
2. Pampering	-.127**	1		
3. Decent	-.254**	.070*	1	
4. Reasoning	-.426**	.155**	.280**	1

Parental Behavior					
Inter-construct correlations	1	2	3	4	5
1. Positive parenting	1				
2. Discipline	-.312**	1			
3. Harsh punishment	-.392**	.432**	1		
4. Material rewarding	.374**	-.240**	-.287**	1	
5. Rule setting	.461**	-.362**	-.353**	.376**	1

Academic Motivation							
Inter-construct correlations	1	2	3	4	5	6	7
1. Intrinsic motivation to know	1						
2. Intrinsic motivation toward the accomplishment	.240**	1					
3. Intrinsic motivation to experience stimulation	.299**	.608**	1				
4. Identified regulation	.278**	.472**	.525**	1			
5. Introjected regulation	.248**	.393**	.524**	.496**	1		
6. External regulation	.252**	.428**	.472**	.428**	.596**	1	
7. Amotivation	-.316**	-.421**	-.501**	-.363**	-.524**	-.625**	1

Academic Responsibility		
Inter-construct correlations	1	2
1. Learning responsibility during class	1	
2. Learning responsibility outside class	.447**	1

Note. **********Correlation is significant at p < .01 (two-tailed).*

3.8. Data Collection Procedures of The Main Study

3.8.1. Administration of Research Instruments

Student participants provided data via structured self-report questionnaires comprising closed-ended items rated on Likert-type scales. This response format allowed respondents to

express varying degrees of agreement or disagreement with the statements, thereby enabling precise and systematic measurement of the study variables. The questionnaires were administered to students in their classrooms during regular school hours to facilitate convenient participation and maintain comparable data collection conditions. Before the administration of the instruments, participants were informed about the purpose of the study and provided with clear guidance on how to complete the questionnaire items. To ensure uniformity in the data collection process, standardized administration procedures were applied across all classrooms, thereby minimizing potential measurement errors.

Using Likert-scale instruments enabled the collection of quantitative data suitable for advanced statistical analyses, including the examination of associations and predictive relationships among the variables under investigation. Furthermore, the instruments used in the study were either previously validated or carefully adapted using established methodological procedures, which helped ensure the reliability and validity of the collected data.

3.8.2. Data Collectors and Training

The data collection activities were conducted by the principal researcher and two doctoral candidates specializing in educational psychology. These doctoral candidates were purposively selected for their familiarity with educational research and prior experience administering surveys. Their involvement helped ensure accurate and consistent administration of the questionnaires.

Before data collection began, the doctoral candidates attended an orientation session led by the researcher. During the session, they were introduced to the study's objectives, the key constructs under investigation, and the overall structure of the research instruments. The orientation also emphasized standardized procedures for administering the questionnaires and for

providing clear guidance to respondents. This preparation was essential for minimizing administration-related bias and ensuring uniformity in data collection across the participating schools.

3.9. Data Analysis Procedures

3.9.1. Preliminary Data Processing

i) Data Transformation, Screening, and Missing Data Treatment

The collected data underwent systematic coding, screening, and validation to ensure accuracy and reliability. Initially, 546 questionnaires were obtained; 41 incomplete responses were excluded, leaving 505 usable cases. Subsequently, univariate and multivariate assumption tests were conducted, and 9 cases were identified as multivariate outliers and removed from the dataset. Accordingly, the final sample comprised 496 participants, with 50.6% female and 49.4% male students, and a nearly equal distribution across Grade 9 (50.2%) and Grade 10 (49.8%).

After data cleaning, the dataset was entered into SPSS version 27 and IBM SPSS AMOS version 23 for further analysis. Responses to measures of perceived teachers' conscious discipline, parenting style, parental behavior, academic motivation, and academic responsibility were recorded as originally provided. Positively worded items were retained in their original form, and negatively worded items, particularly within the autocratic parenting style and amotivation subscales, were also preserved without reverse scoring, consistent with the study's analytical framework. Before conducting the main analyses, data accuracy was verified using frequency distributions and range checks, confirming that all values fell within the expected Likert scale range (1–5) and that no missing data were present. In addition, key statistical assumptions required

for Structural Equation Modeling (SEM) were examined and found to be satisfied, thereby confirming the suitability of the data for subsequent analyses.

ii) Key Statistical Assumptions Guiding Structural Equation Modeling (SEM)

Before conducting the mediation analysis, the dataset was carefully screened to ensure that all underlying assumptions of Structural Equation Modeling (SEM) were adequately met. This preliminary evaluation is essential for obtaining valid and reliable results in SEM analyses, as emphasized in the methodological literature (Collier, 2020; Hair et al., 2009; Kline, 2005). In line with established statistical guidelines, diagnostic procedures were conducted in accordance with the recommendations of Tabachnick and Fidell (2007) and Meyers et al. (2006). Accordingly, the key assumptions required for SEM were systematically assessed before proceeding with the main analysis.

Continuous Dependent Variables: The secondary school semester-based Average Achievement Score (ACHS) was treated as a continuous dependent variable in this study. ACHS was calculated as the arithmetic mean of students' scores across all subjects for a given semester, yielding a composite score typically ranging from 0 to 100. This scoring approach produces interval-level data with a sufficiently large number of possible values, allowing for meaningful distinctions between scores. Consequently, ACHS can reasonably be assumed to approximate a continuous distribution, thereby satisfying the SEM requirement for continuous dependent variables.

Complete Dataset: A key assumption of Structural Equation Modeling (SEM) is that the dataset be free of missing values to ensure accurate parameter estimation. In this study, this requirement was met, as all variables included in the analysis had complete observations with no missing data**.**

Adequate Sample Size: Structural Equation Modeling (SEM) requires a sufficiently large sample to ensure stable parameter estimates and reliable model fit. In the present study, the sample consisted of 496 participants, which exceeds commonly recommended thresholds for SEM applications. Methodological scholars emphasize that larger samples enhance statistical power and the robustness of model estimates (Boomsma, 1982; Hair et al., 2014; Wolf et al., 2013). Therefore, the sample size employed in this study was considered adequate to support the complexity of the proposed model and to yield dependable results**.**

Multivariate Normality: To ensure the validity of the SEM results, the data's distribution was assessed for multivariate normality. This was done by examining the skewness and kurtosis of the study variables, including student-perceived teachers' conscious discipline, parenting style, parental behavior, academic motivation, academic responsibility, and AA. Based on Kline's (2005) criteria, in which skewness indices < |3| and kurtosis indices < |10| are considered acceptable, the data showed no significant departures from normality. Consequently, the distributional requirements for the proposed structural model were met.

Linearity: Structural equation modeling assumes that relationships among variables are linear. This assumption was evaluated by examining bivariate scatter plots between the independent variables (students' perceptions of teachers' conscious discipline, parenting style, parental behavior, academic motivation, and academic responsibility) and the dependent variable (AA). Visual inspection of the scatter plots indicated that the data points were approximately linear and formed elliptical patterns. These results suggest that the linearity assumption was adequately met.

Maximum Likelihood Estimation: In this study, model parameters were estimated using Maximum Likelihood Estimation (MLE), the standard approach in Structural Equation Modeling (SEM) known for its precision and reliability (Hair et al., 2009). MLE identifies parameter values,

such as factor loadings and error variances in measurement models, or path coefficients in structural models, that maximize the likelihood of the observed data. This method ensures that the resulting estimates provide the best possible fit to the observed correlations among variables.

Multicollinearity: The assumption of no multicollinearity was evaluated by examining tolerance and variance inflation factor (VIF) values for the independent variables. The results indicated that all tolerance values exceeded the recommended threshold of .10 and all VIF values were below 10, suggesting that multicollinearity was not a concern in the present study. These findings are consistent with established guidelines for assessing multicollinearity (Kline, 2016).

Unidimensionality: The assumption of unidimensionality holds that each construct under investigation should reflect a single underlying latent factor. In the present study, all constructs, including perceived teachers' conscious discipline, parenting style, parental behavior, academic motivation, academic responsibility, and academic achievement, were operationalized as a single latent dimension. This assumption was empirically examined and supported by exploratory factor analysis (EFA) and confirmatory factor analysis (CFA), which indicated that the measurement items for each construct loaded significantly onto a single factor.

Univariate Outliers: The presence of univariate outliers was assessed using Tukey's boxplot procedure. The results indicated that no extreme values were detected in either the independent or dependent variables, suggesting that the data were free of significant univariate outliers. Multivariate Outliers.

Multivariate Outliers: Multivariate outliers were assessed using Mahalanobis distance (D^2), which quantifies how far each observation deviates from the multivariate centroid of the independent variables. The calculated D^2 values were compared with the critical chi-square value

for 5 degrees of freedom at the .001 level (χ^2 = 20.515), following recommended guidelines (Meyers et al., 2006; Tabachnick & Fidell, 2007). None of the cases exceeded the threshold, indicating no significant multivariate outliers in the dataset.

3.10. Method of data analysis

The present study aimed to investigate the mediating roles of academic motivation and academic responsibility in the relationships among perceived teachers' conscious discipline, parenting style, parental behavior, and academic achievement. To address these objectives, a range of data analysis techniques was employed in accordance with the nature of the research questions.

Descriptive statistics, including means and standard deviations, were computed to summarize participants' scores on perceived teachers' conscious discipline, parenting style, parental behavior, academic motivation, academic responsibility, and academic achievement. Pearson product–moment correlation analysis was conducted to assess the strength and direction of relationships among the study variables and to identify associations with academic achievement.

Furthermore, Structural Equation Modeling (SEM) and path analysis were used to test the hypothesized relationships among the constructs. Specifically, these analyses were conducted to (i) examine the mediating roles of academic motivation and academic responsibility in the relationship between perceived teachers' conscious discipline and academic achievement; (ii) assess the mediating effects of academic motivation and academic responsibility in the association between family-related variables (parenting style and parental behavior) and academic achievement; and (iii) evaluate the combined predictive effects of perceived teachers' conscious discipline and family-related factors on academic achievement through the mediating mechanisms of academic motivation and academic responsibility.

3.11. Ethical consideration

Before data collection, ethical clearance for this study was obtained from the Institutional Research Review Committee (IRRC) of Bahir Dar University's College of Education. An official letter of cooperation was also secured and presented to the relevant institutions to facilitate access to participants. Strict adherence to established ethical standards for research involving human participants was maintained throughout. Participants were provided with comprehensive information about the study's purpose, objectives, and procedures. They were clearly informed of their rights to participate voluntarily, decline participation, or withdraw from the study at any time without any negative consequences. Informed consent was obtained verbally from all participants after ensuring they fully understood the nature and requirements of the study. This process upheld the principle of respect for persons by recognizing participants' autonomy and decision-making rights. Confidentiality and privacy were rigorously maintained throughout the research process. Participants were assured that the information they provided would be used exclusively for academic purposes and would not be disclosed to any third party. To ensure anonymity, no personally identifiable information was recorded, and all responses were coded and securely stored. Access to the data was limited to the researcher. Furthermore, the study was conducted in a manner that minimized any potential risk or harm to participants. The data collection process was designed to be non-intrusive, respectful, and culturally sensitive. These ethical practices helped build trust between the researcher and participants, enhancing openness and honesty in responses. Consequently, adherence to these ethical standards helped ensure the credibility, reliability, and integrity of the research findings.

Chapter Four: Results

This chapter presents the study's empirical findings, based on data collected from 496 secondary school students. The analyses were conducted to address the research objectives by examining relationships among family-related variables (parental behavior and parenting style), teachers' conscious discipline dimensions (empathy, encouragement, positive intent, and composure), students' intrapersonal factors (academic motivation and responsibility), and academic achievement. Additionally, the study assessed the independent effects of family-related variables, perceived teachers' conscious discipline, and students' intrapersonal factors on academic achievement. Furthermore, the mediating role of students' intrapersonal factors in the relationships between family-related variables, perceived teachers' conscious discipline, and academic achievement was investigated. The chapter is organized into four main sections.

The first section presents descriptive statistics for all study variables, summarizing the distribution of students' scores and providing an overview of their reported levels across the measured constructs. The second section examines interrelationships among the key variables using Pearson correlation coefficients, allowing an assessment of the strength and direction of associations before conducting advanced analyses.

The third section focuses on the structural model analysis, in which path analysis was used to test the hypothesized direct and indirect relationships among the variables. This includes an evaluation of model fit indices, estimation of the direct effects of contextual predictors on academic motivation, academic responsibility, and academic achievement, and an examination of the mediating roles of academic motivation and responsibility.

The final section presents the indirect and total effects derived from bootstrapping, providing a comprehensive understanding of how perceived teachers' conscious discipline, family-related factors, and students' intrapersonal characteristics collectively influence academic achievement.

4.1. Descriptive statistics of the study variables

As shown in Table 4, descriptive statistics for all study variables were computed using data from 496 students. Among the teachers' conscious discipline dimensions, empathy scores ranged from 4 to 28 (M = 12.46, SD = 3.97). Encouragement scores ranged from 4 to 20 (M = 13.57, SD = 3.94). Positive intent scores ranged from 3 to 15 (M = 9.36, SD = 2.84), and composure scores ranged from 6 to 29 (M = 18.55, SD = 5.99).

Regarding family-related factors, parenting style scores ranged from 50 to 116 (M = 83.62, SD = 10.78), and parental behavior scores ranged from 31 to 86 (M = 61.74, SD = 9.36). For students' intrapersonal characteristics, academic motivation (M = 81.72, SD = 14.83) and academic responsibility (M = 80.44, SD = 15.86) had relatively high means. Finally, academic achievement scores ranged from 38 to 97, with a mean of 68.56 (SD = 12.45).

Table 4: Descriptive Statistics for Study Variables

Variables	N	Min	Max	M	SD
Empathy (EMPA)	496	4	28	12.46	3.97
Encouragement (ENCO)	496	4	20	13.57	3.94
Positive intent (POSI)	496	3	15	9.36	2.84
Composure (COMP)	496	6	29	18.55	5.99

Parenting Style (PS)	496	50	116	83.62	10.78
Parental Behavior (PB)	496	31	86	61.74	9.36
Academic Motivation (AM)	496	25	115	81.72	14.83
Academic Responsibility (AR)	496	27	114	80.44	15.86
Average Achievement Scores (ACHS)	496	38	97	68.56	12.45

Note. *N* = *sample size*; *Min* = minimum; *Max* = maximum; *M* = mean; *SD* = standard deviation.

4.2. Correlations among the main study variables

A Pearson correlation analysis was used to assess the direction and strength of relationships among the study variables. The results show that students' perceptions of teachers' conscious discipline, along with parenting style and parental behavior, align with their levels of academic motivation, academic responsibility, and academic achievement. All variables showed positive, statistically significant correlations, indicating that supportive interactions at school and at home are associated with greater motivation, greater responsibility, and better academic outcomes.

As shown in Table 5, empathy was positively and significantly correlated with encouragement ($r = .538$, $p < .01$), positive intent ($r = .393$, $p < .01$), and composure ($r = .526$, $p < .01$). These findings indicate that higher perceived teacher empathy is associated with greater encouragement, positive intent, and composure in teachers' conscious discipline practices. Empathy also showed significant positive correlations with parenting style ($r = .326$, $p < .01$), parental behavior ($r = .428$, $p < .01$), academic motivation ($r = .525$, $p < .01$), academic responsibility ($r = .524$, $p < .01$), and academic achievement ($r = .576$, $p < .01$). This suggests that

students who perceive greater empathy from their teachers tend to report more positive family-related experiences, stronger intrapersonal characteristics, and higher academic achievement.

Encouragement showed significant positive correlations with positive intent ($r = .508$, $p < .01$), composure ($r = .687$, $p < .01$), parenting style ($r = .440$, $p < .01$), parental behavior ($r = .527$, $p < .01$), academic motivation ($r = .685$, $p < .01$), academic responsibility ($r = .684$, $p < .01$), and academic achievement ($r = .714$, $p < .01$). These findings suggest that students who perceive higher levels of encouragement from teachers are more likely to report positive family-related experiences, stronger intrapersonal characteristics, and higher academic achievement. Likewise, positive intent was positively and significantly associated with composure ($r = .458$, $p < .01$), parenting style ($r = .336$, $p < .01$), parental behavior ($r = .346$, $p < .01$), academic motivation ($r = .516$, $p < .01$), academic responsibility ($r = .528$, $p < .01$), and academic achievement ($r = .639$, $p < .01$). This indicates that teachers' positive and supportive disciplinary intentions are linked to improved student motivation, responsibility, and academic performance.

Composure showed significant positive correlations with parenting style ($r = .486$, $p < .01$), parental behavior ($r = .545$, $p < .01$), academic motivation ($r = .701$, $p < .01$), academic responsibility ($r = .697$, $p < .01$), and academic achievement ($r = .716$, $p < .01$). These findings suggest that students who perceive greater emotional composure in teachers' disciplinary practices tend to report more supportive family environments, stronger intrapersonal characteristics, and higher academic achievement. Similarly, parenting style showed significant positive relationships with parental behavior ($r = .548$, $p < .01$), academic motivation ($r = .714$, $p < .01$), academic responsibility ($r = .734$, $p < .01$), and academic achievement ($r = .457$, $p < .01$). This indicates that supportive parenting practices are associated with greater student motivation, greater academic responsibility, and improved academic performance.

Parental behavior also showed significant positive correlations with academic motivation ($r = .340$, $p < .01$), academic responsibility ($r = .435$, $p < .01$), and academic achievement ($r = .536$, $p < .01$). These findings suggest that supportive parental behaviors are associated with higher levels of students' motivation, responsibility, and academic success. Furthermore, academic motivation was strongly and positively related to academic responsibility ($r = .425$, $p < .01$) and academic achievement ($r = .738$, $p < .01$), while academic responsibility showed a very strong positive relationship with academic achievement ($r = .762$, $p < .01$). The results revealed a consistent pattern of significant positive relationships among teachers' conscious discipline variables, family-related factors, students' intrapersonal characteristics, and academic achievement, providing preliminary support for the hypothesized structural relationships among the study variables.

Table 5: Pearson Correlations Among Study Variables

Variables	(1)	(2)	(3)	(4)	(5)	(6)	(7)	(8)	(9)	(10)
(1) Empathy	1									
(2) Encouragement	.538**	1								
(3) Positive intent	.393**	.508**	1							
(4) Composure	.526**	.687**	.458**	1						
(5) Conscious Discipline (Composite)	.721**	.812**	.721**	.832**	1					
(6) Parenting Style	.326**	.440**	.336**	.486**	.453**	1				
(7) Parental Behavior	.428**	.527**	.346**	.545**	.548**	.523**	1			
(8) Academic Motivation	.525**	.685**	.516**	.701**	.566**	.714**	.340**	1		
(9) Academic Responsibility	.524**	.684**	.528**	.697**	.344**	.734**	.435**	.425**	1	
(10) Academic Achievement	.576**	.714**	.639**	.716**	.457**	.724**	.536**	.738**	.762**	1

Note: ***P significant at <.01 and two tailed*

The Pearson correlation analysis presented above offers an initial overview of the interrelationships among the major study variables, including teachers' conscious discipline dimensions (empathy, encouragement, positive intent, and composure), family-related factors (parenting style and parental behavior), students' intrapersonal factors (academic motivation and academic responsibility), and academic achievement. As shown in the table above, all variables were significantly and positively correlated at the 0.01 level.

The results further showed that teachers' conscious discipline variables were strongly interrelated and consistently positively associated with family-related factors, students' academic motivation, academic responsibility, and academic achievement. In particular, composure and encouragement showed relatively stronger relationships with students' academic motivation, responsibility, and achievement, underscoring their central role in fostering positive academic outcomes. Similarly, family-related variables showed significant moderate associations with students' intrapersonal factors and academic achievement, suggesting that supportive parenting practices are meaningfully linked to students' motivation and performance. Moreover, academic motivation and academic responsibility were strongly correlated with each other and showed the strongest relationships with academic achievement, indicating that students' intrapersonal factors are key correlates of academic success.

These bivariate relationships provide important preliminary evidence of systematic positive associations among family environment, teacher behavior, student intrapersonal characteristics, and academic achievement. These findings establish a strong empirical foundation for the subsequent path analysis, which further examines direct, indirect, and mediating effects among the variables. While the correlation analysis identifies the strength and direction of associations, the path analysis extends this by testing the hypothesized structural relationships and

clarifying the mechanisms through which teachers' conscious discipline and family-related factors influence academic achievement via students' intrapersonal characteristics.

Integrated Second-Order Measurement Model of Students' Perceptions of Teachers' Conscious Discipline, Parenting Style, Parental Behavior, Academic Motivation, and Academic Responsibility

The fit of the second-order confirmatory factor analysis (CFA) measurement model, comprising a four-factor student-Perceived Teachers Conscious Discipline (PTCD), a four-factor Parenting Style (PS), a five-factor Parental Behavior (PB), a seven-factor Academic Motivation (AM), and a two-factor Academic Responsibility (AR), was evaluated using the chi-square-to-degrees-of-freedom ratio (χ^2/df) and several goodness-of-fit indices, including the goodness-of-fit index (GFI), normed fit index (NFI), comparative fit index (CFI), and root mean square error of approximation (RMSEA). The results indicated that the model fit the data well, with χ^2 (2981) = 5595.58 and χ^2/df = 1.88, below the commonly recommended threshold of 3. Additional fit indices further supported the adequacy of the model, with GFI = .898, NFI = .905, CFI = .903, and RMSEA = .045, all within acceptable ranges (e.g., NFI and CFI ≥ .90; RMSEA ≤ .06–.08). Overall, these findings suggest that the adapted instruments adequately represented their respective latent constructs and provided empirical support for the proposed hierarchical measurement structure.

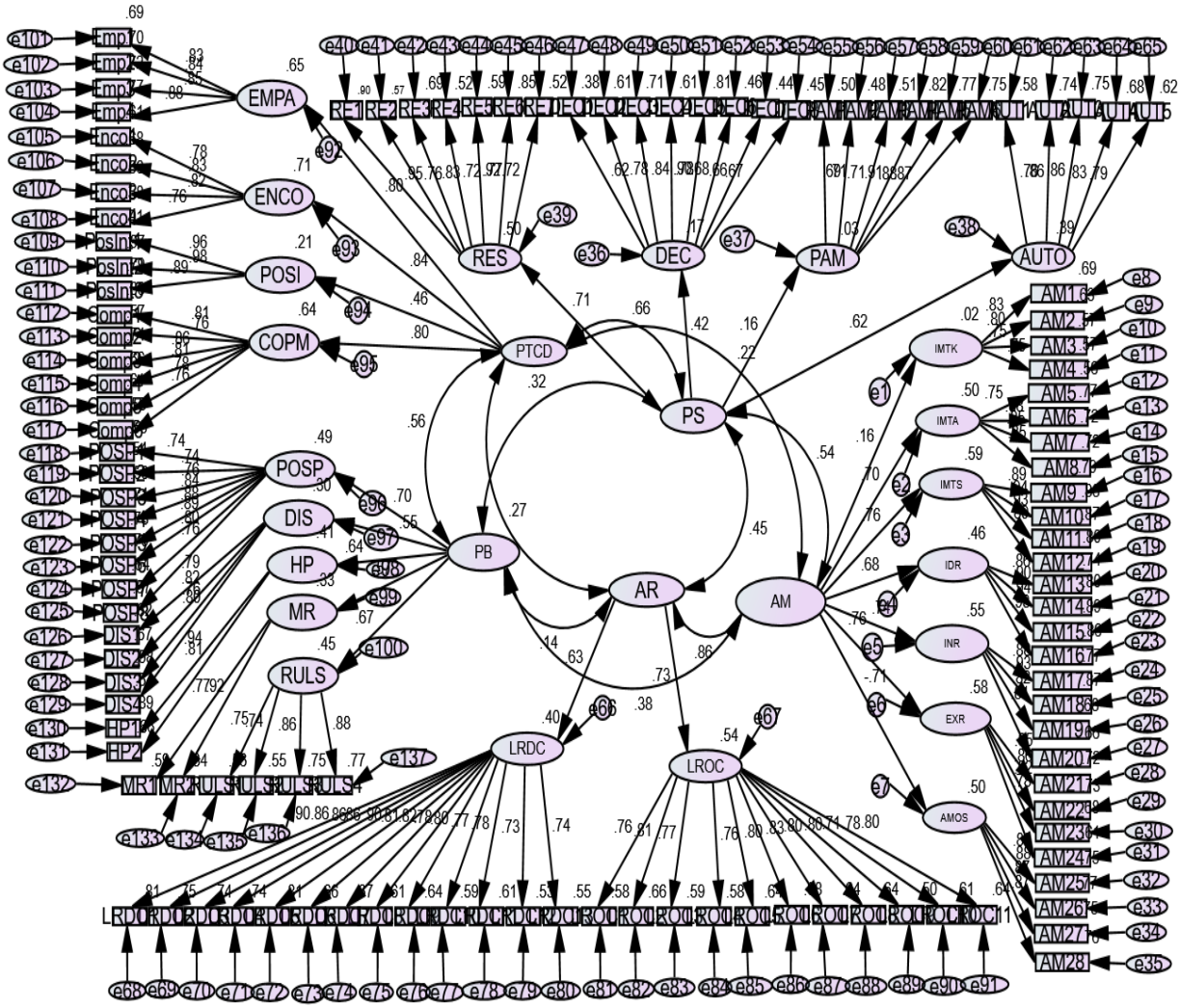

Figure 11. Second-Order structural measurement model representing Perceived Teacher Conscious Discipline (PTCD), Parenting Style (PS), Parental Behavior (PB), Academic Motivation (AM), and Academic Responsibility (AR), with standardized coefficients (n = 496).

4.3. Mediation Analysis Using Full Structural Equation Modeling

To explore the mechanisms linking the study variables, a full structural analysis was conducted to assess both direct and indirect effects of perceived teachers' conscious discipline, parenting style, and parental behavior on academic achievement. In this model, academic motivation and academic responsibility were specified as mediators. This approach was selected

because it enables the structured, efficient testing of theoretically grounded causal pathways among observed variables. By modeling directional relationships, the analysis captures how teacher-related and family-related influences are transmitted through students' intrapersonal processes to affect academic achievement. Furthermore, this analysis offers a practical and transparent framework for estimating the magnitude and statistical significance of both direct and mediated effects, thereby providing a clear understanding of the interplay among the study variables.

Evaluation of the Structural Model

To evaluate the adequacy of the proposed model, a full structural analysis was conducted within the structural equation modeling (SEM) framework to examine relationships among the observed variables. Model fit was assessed using widely recommended indices, including the chi-square-to-degrees-of-freedom ratio (CMIN/DF), Comparative Fit Index (CFI), Tucker–Lewis Index (TLI), Goodness-of-Fit Index (GFI), Standardized Root Mean Square Residual (SRMR), and Root Mean Square Error of Approximation (RMSEA). Based on established guidelines, a CMIN/DF of 3.0 or less indicates acceptable fit; CFI, TLI, and GFI values of .90 or higher (preferably .95 or above) indicate good fit; and RMSEA and SRMR values of .08 or below indicate satisfactory fit (Byrne, 2016; Kline, 2016).

The results indicated that the proposed model fit the data well, with CMIN/DF = 2.764, CFI = .956, TLI = .967, GFI = .928, RMSEA = .047, and SRMR = .054. All fit indices fell within recommended thresholds, indicating acceptable to good model fit across criteria. Accordingly, the model was considered adequate for further analysis of the hypothesized direct and indirect relationships among the study variables.

Direct effects of parental behavior, perceived teachers' conscious discipline, and parenting style on academic motivation, responsibility, and academic achievement

The structural model was specified to examine the direct and indirect relationships among parental behavior, parenting style, and students' perceptions of teachers' conscious discipline, and to assess how these factors shape students' intrapersonal characteristics (academic motivation and responsibility), which in turn contribute to their academic achievement.

As shown in Figure 12, the structural model reports standardized path coefficients (β) and the proportion of variance explained (R^2) for each endogenous variable, reflecting the predictive contributions of the exogenous variables. The results indicate that parental behavior, perceived teachers' conscious discipline, and parenting style collectively explain 67% of the variance in academic motivation ($R^2 = .67$) and 44% of the variance in academic responsibility ($R^2 = .44$). Furthermore, the overall model accounts for 61% of the variance in students' academic achievement.

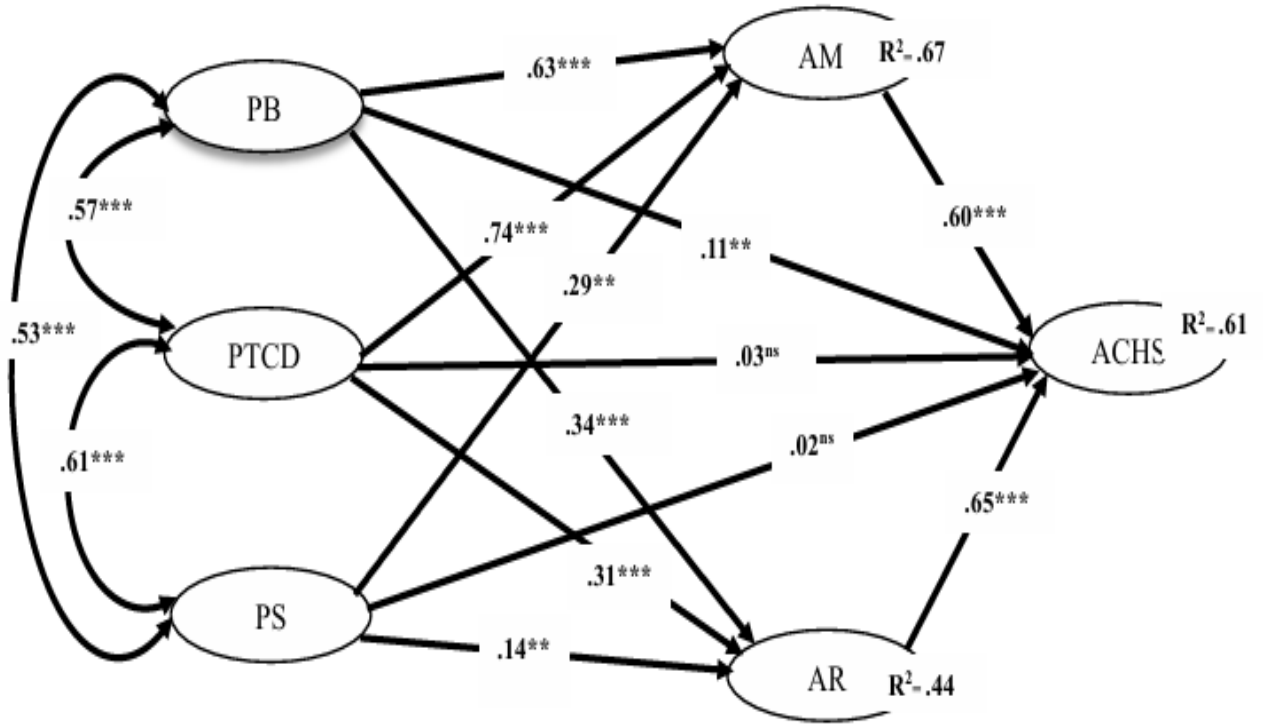

Figure 12. Structural model showing the direct relationships among parental behavior (PB), parenting style (PS), students' perceptions of teachers' conscious discipline (PTCD), students' intrapersonal factors (academic motivation (AM) and academic responsibility (AR)), and academic achievement (ACHS).

*Note: ***p < .001, **p < .01, ^{ns} p > .05*

Direct effect of Parental behavior → academic motivation and achievement

Parental behavior had significant positive direct effects on both academic motivation and academic achievement. It strongly predicted academic motivation (β = .634, B = .512, C.R. = 10.039, p < .001). It also had a significant direct effect on academic achievement (β = .109, B = .224, C.R. = 2.357, p = .009).

Direct effect of students' perceptions of teachers' conscious discipline → academic motivation and academic achievement

Student-perceived teacher conscious discipline was examined as a predictor of both academic motivation and academic achievement. The results indicated that perceived teachers' conscious discipline had a strong, statistically significant positive effect on academic motivation ($\beta = .737$, B = .635, C.R. = 23.519, $p < .001$). However, its direct effect on academic achievement was not statistically significant ($\beta = .033$, B = .497, C.R. = .667, $p = .568$). These findings suggest that while perceived teachers' conscious discipline plays an important role in enhancing students' academic motivation, it does not directly predict their academic achievement.

Direct effect of Parenting style → academic motivation, and academic achievement

Parenting style was examined as a predictor of both academic motivation and academic achievement. The findings showed that parenting style had a statistically significant positive effect on academic motivation ($\beta = .290$, B = .319, S.E. = .052, C.R. = 6.134, 95% CI [.192, .380], $p = .002$). However, the direct effect of parenting style on academic achievement was not statistically significant ($\beta = .015$, B = .464, S.E. = 1.094, C.R. = .424, 95% CI [−.062, .088], $p = .706$). These results suggest that parenting style contributes positively to students' academic motivation, although it does not directly predict academic achievement.

Direct effect of Parental behavior → academic responsibility

Parental behavior was examined as a predictor of academic responsibility. The results indicated that parental behavior had a statistically significant positive effect on academic responsibility and was a strong predictor ($\beta = .335$, B = .494, C.R. = 8.098, $p < .001$). These

findings suggest that higher levels of parental behavior are associated with greater academic responsibility among students.

Direct effect of students' perceptions of teachers' conscious discipline → academic responsibility

Student-perceived teacher conscious discipline was analyzed in relation to academic responsibility. The findings showed a significant positive association, indicating that it is a strong predictor of students' academic responsibility ($\beta = .312$, $B = .260$, $C.R. = 8.125$, $p < .001$). This suggests that students who perceive higher levels of teacher conscious discipline tend to exhibit greater academic responsibility.

Direct effect of Parenting style → academic responsibility

Analysis revealed that parenting style is a significant predictor of students' academic responsibilities. The results showed a notable positive association ($\beta = .135$, $B = .225$, $C.R. = 3.269$, $p = .004$), indicating that higher parental support is linked to greater ownership of academic responsibilities.

Direct effect of Academic motivation → academic achievement

Academic motivation was examined as a predictor of academic achievement. The findings showed that academic motivation had a statistically significant positive effect on students' academic achievement and was a strong predictor ($\beta = .603$, $B = .505$, $C.R. = 5.489$, $p < .001$). This indicates that higher levels of academic motivation are associated with better academic achievement among students.

Direct effect of Academic responsibility → academic achievement

Academic responsibility was assessed as a determinant of academic achievement. The findings demonstrated a significant positive relationship between academic responsibility and students' academic achievement, with academic responsibility emerging as a strong predictor (β = .646, B = .656, C.R. = 4.288, p < .001). This result implies that students who exhibit higher levels of academic responsibility tend to achieve better academic outcomes.

Table 6: Direct Effects of Predictor Variables on Mediators and Academic Achievement

Paths	Unstandardized estimates *(B)*				Standardized estimates *(β)*		
	B	*S.E.*	*C.R.*	*P*	*β*	*95% CI*	*P*
(1) PB → AM	.512	.051	10.039	<.001	.634	[.553, .659]	<.001
(2) TCD → AM	.635	.027	23.519	<.001	.737	[.693, .777]	<.001
(3) TCD → AR	.260	.032	8.125	<.001	.312	[.240, .381]	<.001
(4) PB → AR	.494	.061	8.098	<.001	.335	[.249, .417]	<.001
(5) PS → AM	.319	.052	6.134	.001	.290	[.192, .380]	.002
(6) PS → AR	.225	.069	3.269	.003	.135	[.050, .219]	.004
(7) TCD → ACHS	.497	.745	.667	.504	.033	[-.133, .075]	.568
(8) AM → ACHS	.505	.092	5.489	<.001	.603	[.515, .651]	<.001
(9) AR → ACHS	.656	.153	4.288	<.001	.646	[.579, .715]	<.001

Paths		Unstandardized estimates *(B)*				Standardized estimates *(β)*		
		B	*S.E.*	*C.R.*	*P*	*β*	*95% CI*	*P*
(10)	PS → ACHS	.464	1.094	.424	.672	.015	[-.062, .088]	.706
(11)	PB → ACHS	.224	.095	2.357	.012	.109	[.024, .192]	.009

Note: PB = parental behavior; TCD = perceived teachers' conscious discipline; PS = parenting style; AM = academic motivation; AR = academic responsibility; ACHS = academic achievement.

Analysis of indirect and total effects of parental behavior, students' perceptions of teachers' conscious discipline, and parenting style on students' academic achievement

This analysis examined the indirect and total effects of parental behavior, perceived teachers' conscious discipline, and parenting style on students' academic achievement, with academic motivation and academic responsibility serving as mediators. To evaluate these relationships, user-defined estimands were specified in AMOS (Version 23) to estimate direct, indirect, and total effects of the predictors on academic achievement. A bootstrapping procedure with 5,000 resamples and 95% bias-corrected confidence intervals was used to assess the robustness and stability of the parameter estimates.

Table 7: Indirect and Total Effects on Students' Academic Achievement: Results from User-Defined Estimands in AMOS

Parameter		**Estimate**	**Lower**	**Upper**	**P**
Specific indirect effect of:	**Mediators**				
(1) Parental behavior	Via Academic motivation	.258	.036	.310	<.001
(2) Parental behavior	Via Academic responsibility	.324	.060	.659	<.001

(3) Teachers' conscious discipline	Via Academic motivation	.321	.249	.560	<.001
(4) Teachers' conscious discipline	Via Academic responsibility	.171	.140	.312	<.001
(5) Parenting style	Via Academic motivation	.161	.034	.315	.002
(6) Parenting style	Via Academic responsibility	.148	.102	.366	.004
Total indirect effect of:					
(1) Parental behavior	Via AM and AR	.582	.445	.667	<.001
(2) Teachers' conscious discipline	Via AM and AR	.492	.406	.734	<.001
(3) Parenting style	Via AM and AR	.309	.154	.279	.002
Total effect of:					
(1) Parental behavior	(Direct + Indirect)	.806	.715	.879	<.001
(2) Teachers' conscious discipline	(Direct + Indirect)	.989	.802	1.081	<.001
(3) Parenting style	(Direct + Indirect)	.773	.597	.897	.009

As shown in Table 7 above, parental behavior had significant indirect effects on academic achievement through academic motivation (β = .258, 95% CI [.036, .310], p < .001) and academic responsibility (β = .324, 95% CI [.060, .659], p < .001). Likewise, perceived teachers' conscious discipline had significant indirect effects through academic motivation (β = .321, 95% CI [.249, .560], p < .001) and academic responsibility (β = .171, 95% CI [.140, .312], p < .001). Parenting

style also had significant indirect effects through academic motivation (β = .161, 95% CI [.034, .315], p = .002) and academic responsibility (β = .148, 95% CI [.102, .366], p = .004).

Regarding total indirect effects, parental behavior significantly influenced academic achievement through the combined mediators (β = .582, 95% CI [.445, .667], p < .001). Similarly, perceived teachers' conscious discipline had a significant total indirect effect through academic motivation and academic responsibility (β = .492, 95% CI [.406, .734], p < .001), as did parenting style (β = .309, 95% CI [.154, .279], p = .002). For total effects (direct plus indirect), all predictor variables significantly predicted academic achievement. Parental behavior showed a strong total effect (β = .806, 95% CI [.715, .879], p < .001), followed by perceived teachers' conscious discipline (β = .989, 95% CI [.802, 1.081], p < .001) and parenting style (β = .773, 95% CI [.597, .897], p = .009). These findings indicate that all hypothesized predictors meaningfully contributed to students' academic achievement both directly and indirectly through the mediating variables.

The results in Table 7 indicate that the specific indirect effects, total indirect effects, and total effects of parental behavior, perceived teachers' conscious discipline, and parenting style on academic achievement are statistically significant through the mediating roles of academic motivation and responsibility. More specifically, parental behavior showed both significant direct and indirect effects on academic achievement, indicating a partial mediation model. This suggests that while academic motivation and academic responsibility significantly transmit the effect of parental behavior, a direct pathway from parental behavior to academic achievement also remains significant, implying the presence of additional unmeasured mechanisms influencing achievement.

In contrast, perceived teachers' conscious discipline and parenting style showed significant indirect effects through academic motivation and academic responsibility; however, their direct effects on academic achievement were not statistically significant. This pattern indicates full

mediation, suggesting that the influence of perceived teachers' conscious discipline and parenting style on academic achievement operates entirely through academic motivation and academic responsibility.

In general, the findings suggest that academic motivation and academic responsibility are key mechanisms through which the environmental and behavioral factors under study relate to students' academic achievement. Parental behavior affects achievement both directly and indirectly. In contrast, perceived teachers' conscious discipline and parenting style influence achievement only indirectly.

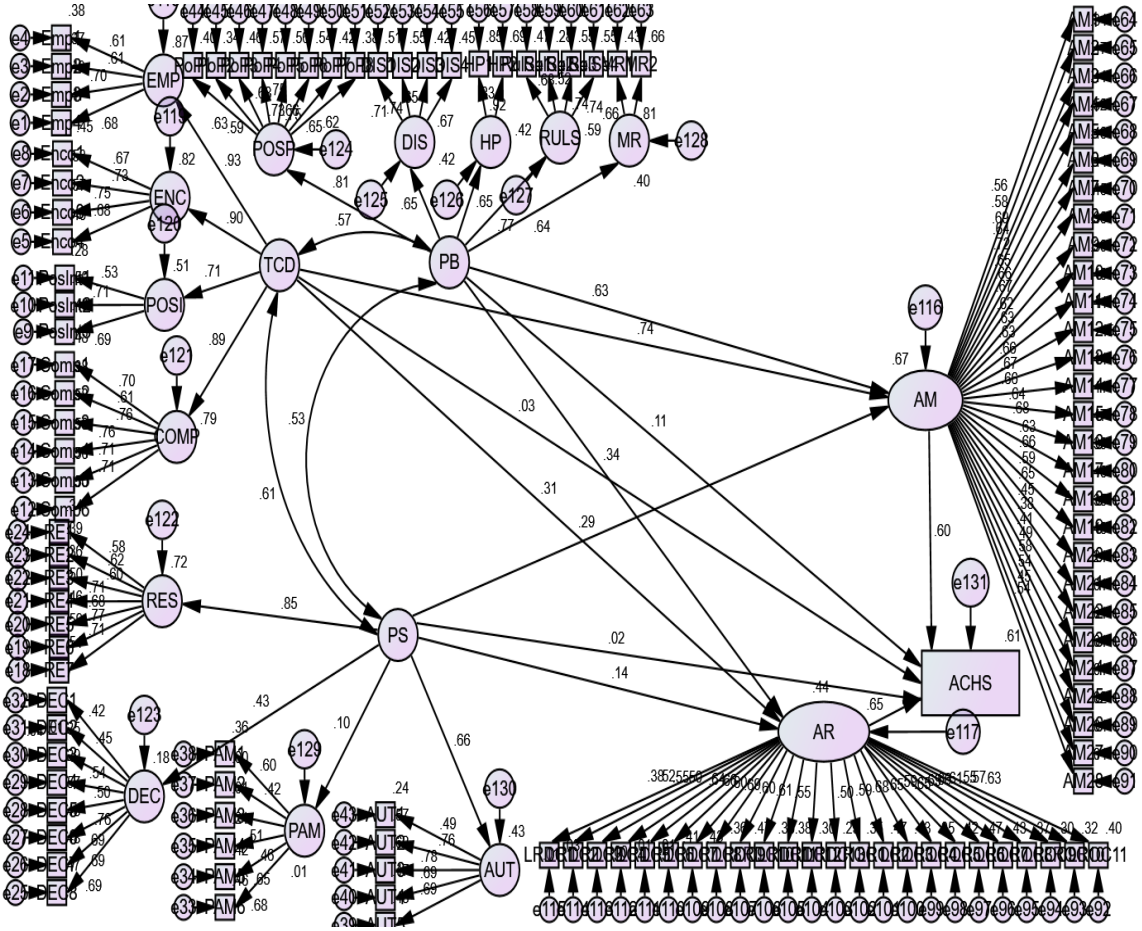

Figure 13. Full Structural Equation Model Illustrating the Relationships among students' perceptions of Teachers' Conscious Discipline, Parenting Style, Parental Behavior, Academic Motivation, Academic Responsibility, and Academic Achievement.

Chapter Five: Discussion and Implications

This study examined how family-related factors (parenting style and parental behavior), perceived teachers' conscious discipline, and students' intrapersonal factors (academic motivation and academic responsibility) relate to academic achievement among secondary school students. A central focus was the extent to which academic motivation and responsibility mediate the relationships between these external influences and students' academic achievement. Collectively, these findings illuminate the mechanisms by which family- and teacher-related factors shape academic achievement during secondary education, a developmental period marked by increasing academic demands and growing student autonomy.

This chapter systematically addresses the research questions by organizing the discussion into four sections. The first section interprets the correlational findings, focusing on relationships among family-related variables, perceived teachers' conscious discipline, intrapersonal factors, and academic achievement. The second section evaluates the direct effects identified through structural analysis, emphasizing each predictor's independent contribution. The third section examines the mediation analysis, exploring how academic motivation and responsibility serve as key pathways linking external factors to achievement and assessing both partial and full mediation. Finally, the chapter synthesizes the major findings, discusses their theoretical and practical implications for enhancing students' academic achievement, and suggests directions for future research.

5.1. Relationships among key study variables

5.1.1. Family-Related Factors (Parenting Style and Parental Behavior) and Academic Achievement

The present findings revealed positive associations between family-related variables and students' academic achievement. Parenting style showed a moderately positive relationship with achievement ($r = .457$, $p < .01$). Parental behavior, by contrast, showed a notably stronger correlation ($r = .54$, $p < .01$), both within the moderate-to-large range according to Cohen's (1988) conventions. These findings suggest that tangible, goal-directed parental actions, such as active supervision and direct academic involvement, are more strongly associated with secondary school achievement than emotional warmth alone. Both effect sizes are somewhat smaller than those reported in previous meta-analyses (Jeynes, 2012, $r = .50–.65$). This discrepancy may be attributed to differences in measurement approaches, cultural contexts, or the declining influence of parental involvement during later adolescence (Wang & Sheikh-Khalil, 2014). These results align with Bronfenbrenner's (1979) ecological systems theory, which positions the family microsystem as the primary developmental context in which parental behaviors function as proximal processes, defined as regular, progressively complex interactions that directly shape children's cognitive and academic development throughout childhood. Within this framework, the stronger association observed for parental behavior relative to parenting style is theoretically coherent: discrete behavioral practices constitute more direct proximal processes than the broader relational climate captured by parenting style and therefore exert a more immediate influence on academic achievement.

Empirically, these findings align with research showing that parental responsiveness, academic socialization, and behavioral monitoring robustly predict adolescent achievement

(Cheung & Pomerantz, 2011; Hill & Tyson, 2009; Jeynes, 2012). In the Ethiopian context, Assefa and Sintayehu (2019) and Feyisa and Gonfa (2024) found that parental encouragement and home-based academic support are significantly associated with secondary school performance. The somewhat stronger correlation reported by Assefa and Sintayehu (2019; r = .64) may reflect differences in sample characteristics or measurement methods. Taken together, both sets of findings converge on the conclusion that engaged parenting is consistently and positively related to academic achievement in Ethiopian schools.

5.1.2. Students' Perceptions of Teachers' Conscious Discipline and Academic Achievement

The findings revealed a strong association between perceived teachers' conscious discipline and academic achievement ($r = .72$, $p < .01$), indicating a large effect size by Cohen's (1988) conventions. Examination of individual components confirmed that all four dimensions correlated significantly with achievement: encouragement ($r = .71$), positive intent ($r = .64$), empathy ($r = .58$), and composure ($r = .46$), with encouragement showing the strongest relationship. This overall effect size exceeds the weighted mean correlations of approximately $r = .35–.50$ reported in prior meta-analyses of teacher social-emotional competence (Jennings & Greenberg, 2009). This discrepancy may reflect adolescents' heightened sensitivity to teachers' affective qualities at the secondary school level (Roorda et al., 2011) or methodological factors such as shared method variance. These findings are consistent with self-determination theory (Ryan & Deci, 2000), which posits that teachers who demonstrate empathy, encouragement, composure, and positive intent fulfill students' basic psychological needs for autonomy, competence, and relatedness, thereby creating classroom conditions under which academic engagement and achievement are most likely to flourish. Within this framework, the prominence

of encouragement (r = .71) among the four components is theoretically coherent: encouragement most directly strengthens students' perceived competence and communicates that academic success is both expected and attainable, thereby fulfilling the competence need that SDT identifies as most proximate to sustained academic effort.

Empirical research consistently shows that emotionally supportive and encouraging teacher behaviors are linked to stronger student self-regulation and improved academic achievement (Hamre & Pianta, 2005; Roorda et al., 2011; Wentzel, 2017). In the Ethiopian context, although direct studies on conscious discipline remain limited, existing research confirms that positive teacher–student relationships and emotionally supportive classroom environments are significantly associated with students' academic motivation and achievement. Recent meta-analytic evidence from sub-Saharan African educational contexts underscores the importance of teacher socio-emotional competence for student engagement and academic achievement (Gebre et al., 2024). The observed strong correlation (r = .72) may partly reflect the cultural value placed on respectful, emotionally close teacher–student relationships in Ethiopia, where teachers are traditionally regarded as mentors whose encouragement carries exceptional motivational weight. This aligns with empirical findings from Ethiopian secondary schools showing that structured, teacher-directed classroom management and warm, demanding teaching styles are associated with significantly higher student achievement (Abebe et al., 2026; Gedamu, 2024). To the author's knowledge, this study is the first to examine the four-component conscious discipline model in relation to academic achievement among Ethiopian secondary school students.

5.1.3. Academic motivation, responsibility, and academic achievement

The present study confirmed strong positive associations between intrapersonal factors and academic achievement: academic motivation (r = .74, p < .01) and academic responsibility (r =

.76, $p < .01$), each representing large effect sizes according to Cohen's (1988) conventions. The slightly stronger association for academic responsibility suggests that students' ability to manage tasks, maintain accountability, and persist through academic challenges may be a particularly important correlate of achievement. Both effect sizes substantially exceed the weighted mean correlations reported in prior meta-analyses, approximately $r = .30$ for motivation-related constructs (Richardson et al., 2012) and $r = .30–.40$ for grit-related constructs (Crede et al., 2017). This discrepancy may reflect developmental differences between the adolescent sample in the present study and the university samples used in prior meta-analyses. It may also reflect culturally amplified achievement expectations in the Ethiopian context. In addition, the use of self-report measures may have inflated associations by introducing shared method variance.

Self-determination theory (Ryan & Deci, 2000) and expectancy–value theory (Eccles & Wigfield, 2002) jointly underpin these findings, suggesting that students who experience autonomy and view academic tasks as meaningful are more likely to sustain effort, regulate their behavior, and achieve better outcomes. Bandura's (1986) social cognitive theory and self-regulated learning theory (Zimmerman, 2002) further clarify the findings on responsibility: students who take ownership of their learning engage in goal setting, self-monitoring, and strategic behavior, which directly enhance performance. Duckworth and Seligman (2005) provided compelling empirical support for this view, finding that self-discipline predicted academic performance more strongly than intellectual ability ($r = .67$ vs. $r = .32$). Taken together, these frameworks demonstrate that academic motivation and responsibility are more than mere correlates of achievement; they are active psychological mechanisms that translate environmental influences into academic outcomes.

In the Ethiopian context, Kassaw et al. (2024) and Dagnew (2017) reported that motivational orientation and positive academic attitudes significantly predicted student performance. Ethiopian research shows that self-regulated learning strategies and goal-setting orientation are significant predictors of academic achievement in secondary schools (Emagnaw, 2019; Tadesse et al., 2022; Yigzaw & Fentie, 2013). Furthermore, recent empirical evidence suggests that autonomous motivation and intrinsic goal orientations are more strongly associated with sustained academic engagement and achievement than extrinsic or controlled motivational styles (Terefe et al., 2025). Differences in measurement and analytical approaches across studies limit direct comparisons of effect sizes. To the author's knowledge, no prior Ethiopian study has simultaneously examined academic motivation and academic responsibility in relation to achievement using the specific measures employed here. Therefore, these findings extend the Ethiopian educational psychology literature by demonstrating that both constructs, particularly academic responsibility, are strongly and meaningfully associated with secondary school achievement.

5.2. Contributions of Family-Related Factors, Students' Perceptions of Teachers' Conscious Discipline, and Intrapersonal Factors to Students' Academic Achievement

This study demonstrated that family-related factors, perceived teachers' conscious discipline, and students' intrapersonal factors together explained a substantial proportion of variance in academic achievement ($R^2 = .61$), indicating a large and theoretically meaningful effect. This pattern supports ecological and motivational perspectives, which hold that academic achievement emerges from the combined influence of supportive family environments, emotionally responsive classroom experiences, and students' internal psychological characteristics, rather than from any single factor acting in isolation. Parenting styles, parental

behavior, and teachers' conscious disciplinary practices (characterized by empathy, encouragement, composure, and positive intent) appear to create the relational conditions under which students develop stronger academic motivation and responsibility. These intrapersonal characteristics, in turn, strengthen students' engagement, persistence, and accountability, ultimately contributing to improved academic achievement. While the subsections that follow will examine each predictor's specific contribution, the present model advances existing knowledge by simultaneously testing the direct and indirect pathways linking students' perceptions of teachers' conscious discipline, family-related factors, academic motivation, and academic responsibility to academic achievement among Ethiopian secondary school students. In doing so, it provides a more integrated account of how home and school contexts operate through students' intrapersonal processes than previous Ethiopian studies have offered.

5.2.1. Parental Behavior as a Predictor of Academic Achievement

Structural analysis revealed a statistically significant but small positive direct effect of parental behavior on academic achievement ($\beta = .109$, $p = .009$), even after accounting for academic motivation and responsibility as mediators. This suggests that parental behavior has a limited direct influence, with most of its effect operating indirectly through students' internal motivational and self-regulatory processes.

This finding aligns with prior research. Pinquart and Ebeling (2020) found that parental academic involvement positively predicted achievement, but the direct effects diminished substantially when student-level mediators were controlled for. Similarly, Wilder (2014) reported modest direct effects after accounting for individual student variables, and Castro et al. (2015) observed small-to-moderate direct effects ($r = .18–.30$) when motivational factors were included.

Bronfenbrenner's (1979) concept of proximal processes offers a theoretical explanation for this residual direct path, as parental behaviors such as homework supervision, structured routines, and teacher communication create immediate learning conditions that support achievement independently of psychological mediators.

In conclusion, parental behavior makes a small but significant direct contribution to academic achievement, complementing its larger indirect influence via intrapersonal factors. These findings affirm that active parental engagement operates through both direct instructional and indirect psychological channels.

5.2.2. Parenting Style as a Predictor of Academic Achievement

The direct effect of parenting style on academic achievement was not statistically significant ($\beta = .015$, $p = .706$). The near-zero coefficient and the wide confidence interval that spans zero indicate that parenting style has no independent effect on achievement once academic motivation, academic responsibility, and parental behavior are included in the model. This finding does not imply that parenting style is irrelevant to academic achievement; rather, its influence on achievement is fully mediated by students' intrapersonal factors.

This pattern is well supported in the contemporary literature. In a comprehensive meta-analysis of 308 studies, Pinquart (2016) found modest direct associations between parenting styles and academic achievement ($r = .10–.18$). These associations were substantially weakened when motivational and self-regulatory variables were included as controls, suggesting that intrapersonal factors account for most of the style-achievement link. Likewise, Hayek et al. (2022) found that students' self-efficacy and intention to obtain good grades mediated the relationship between authoritative parenting and academic achievement, indicating that parenting style influences

achievement largely through motivational and self-regulatory processes. More recently, Hwang and Jung (2021) reported similar findings among adolescent samples, concluding that parenting style predicts achievement primarily through its effect on students' autonomous motivation and academic self-regulation rather than through direct behavioral transmission.

The absence of a significant direct effect aligns with Baumrind's (1967, 1991) original conceptualization of parenting style as a relational climate rather than a set of specific behavioral practices. Unlike distinct parental behaviors, which can directly scaffold learning tasks and structure academic conditions, parenting style operates as a broader socialization context. According to Baumrind (1991), authoritative parenting influences children's competence and self-regulation through psychological internalization rather than direct behavioral transmission. Consequently, the effect of parenting style on achievement is necessarily distal, transmitted through the motivational and responsibility-based characteristics it cultivates over time.

In conclusion, the non-significant direct effect strengthens rather than weakens the theoretical argument of the present study: it confirms that parenting style functions as a distal environmental influence, with its effects on academic achievement fully transmitted through the intrapersonal mediators examined in this model.

5.2.3. Students' Perceptions of Teachers' Conscious Discipline as a Predictor of Academic Achievement

Although students' perceptions of teachers' conscious discipline showed a strong bivariate association with academic achievement ($r = .72$, $p < .01$), its direct effect in the structural model was not statistically significant ($\beta = .033$, $p = .568$). This pattern is a hallmark of full mediation. When academic motivation ($\beta = .603$) and academic responsibility ($\beta = .646$) are included

simultaneously, they absorb the pathway through which conscious discipline affects achievement, leaving no significant residual direct effect. Thus, conscious discipline influences achievement not by acting directly on grades but by building the internal psychological resources students bring to their academic work.

Existing literature supports this interpretation. Jennings and Greenberg (2009) argued that the pathway from teacher social-emotional competence to academic achievement is largely indirect, mediated by classroom climate, engagement, and self-regulation. Similarly, in a meta-analysis of 99 studies, Roorda et al. (2011) found that positive affective teacher-student relationships were strongly associated with student engagement and moderately associated with academic achievement, suggesting that motivational and engagement processes may partially explain achievement outcomes. Likewise, Klem and Connell (2004) reported that teacher support promoted academic achievement primarily by enhancing students' engagement and motivational functioning.

Theoretically, this mediated pathway aligns with self-determination theory (Ryan & Deci, 2000). Teachers who practice conscious discipline, demonstrating empathy, composure, encouragement, and positive intent, fulfill students' basic psychological needs for autonomy, competence, and relatedness. These fulfilled needs foster internalized motivation and academic responsibility, which, in turn, drive achievement. The direct path from teacher behavior to grades is bypassed because conscious discipline operates at the level of psychological climate rather than through direct cognitive instruction.

Within the Ethiopian educational context, where teacher authority and interpersonal influence remain highly valued in classroom interactions (Serbessa, 2006), this finding is particularly meaningful. It suggests that investing in teachers' socio-emotional competencies may

yield stronger academic benefits by enhancing students' motivation and self-regulation, rather than relying solely on direct instructional practices. In this context, emotionally supportive teacher behaviors appear to foster academic achievement indirectly by strengthening students' engagement, motivation, and adaptive learning behavior.

In conclusion, the non-significant direct effect of perceived teachers' conscious discipline on academic achievement, paired with its strong indirect influence on motivation and responsibility, indicates that teacher socio-emotional practices shape student outcomes by cultivating internal psychological resources rather than through direct transmission.

5.2.4. Academic Motivation as a Predictor of Academic Achievement

Structural analysis showed that academic motivation had a strong, statistically significant direct effect on academic achievement ($\beta = .603$, $p < .001$). This coefficient indicates that academic motivation is one of the two strongest proximate predictors in the structural model, second only to academic responsibility ($\beta = .646$). The path reflects the direct contribution of students' motivational orientation to achievement after accounting for parental behavior, parenting style, and teachers' conscious discipline, establishing academic motivation as a strong intrapersonal driver of achievement, independent of environmental influences.

A well-established empirical literature supports this finding. Steinmayr et al. (2019), in a longitudinal study, found that intrinsic motivation independently predicted academic achievement beyond cognitive ability and prior performance. Similarly, Vu et al. (2022) concluded that autonomous motivation is consistently associated with stronger academic achievement across educational settings. In addition, Taylor et al. (2014) showed that intrinsic motivation uniquely predicted school achievement over time within a self-determination theory framework.

This finding is explained by expectancy–value theory (Eccles & Wigfield, 2002). According to this framework, students who perceive academic tasks as personally meaningful (value) and attainable (expectancy) are more likely to invest sustained effort, adopt effective learning strategies, and maintain goal commitment over time. These behavioral and cognitive processes translate directly into higher academic achievement. In the structural model, the large direct effect (β = .603) indicates that environmental influences from family and the classroom, discussed in Sections 5.2.1 through 5.2.3, operate in part by shaping students' motivational expectations and task values. Motivation itself remains a powerful independent driver of academic achievement.

In conclusion, the strong and significant direct effect of academic motivation on achievement confirms that motivation is a central, immediate mechanism in the present model, reinforcing the theoretical argument that environmental influences, whether from the family or the classroom, must first activate students' motivational resources to produce meaningful gains in academic achievement.

5.2.5. Academic Responsibility as a Predictor of Academic Achievement

The structural analysis revealed that academic responsibility had the strongest direct effect on academic achievement among all predictors in the model (β = *.646*, $p < .001$). This finding indicates that students who effectively manage their academic tasks, regulate their learning behaviors, and maintain accountability for their studies are more likely to achieve higher academic achievement.

This result is strongly supported by self-regulated learning theory (Zimmerman, 2002), which emphasizes that responsible learners actively engage in goal setting, self-monitoring, time management, and self-evaluation to enhance academic achievement. The stronger predictive effect

of academic responsibility compared with academic motivation further suggests that behavioral self-regulation may be a more immediate determinant of achievement.

This finding adds to a growing body of empirical evidence that responsible, self-regulatory academic behavior strongly predicts academic achievement. Duckworth and Seligman (2005) showed that self-discipline predicted academic performance more strongly than IQ across several educational outcomes. Similarly, in a large meta-analysis of psychosocial predictors of university achievement, Richardson et al. (2012) identified conscientiousness, academic self-efficacy, and self-regulatory learning strategies as among the strongest non-cognitive predictors of academic performance. More recently, Crede et al. (2017) found that grit, particularly perseverance of effort, was modestly associated with academic achievement, though much of its predictive influence overlapped with conscientiousness.

In conclusion, the finding that academic responsibility is the strongest direct predictor of achievement ($\beta = .646$) carries a clear practical message: cultivating students' self-regulatory discipline and sense of academic ownership is the most direct investment a school or family can make to improve academic achievement. Section 5.3 examines the external pathways through which this disposition is developed.

5.3. Contributions of Family-Related Factors and Students' Perceptions of Teachers' Conscious Discipline to Academic Motivation and Responsibility

5.3.1. Parental Behavior as a Predictor of Academic Motivation and Responsibility

Structural analysis showed that parental behavior significantly predicted both academic motivation ($\beta = .634$, $p < .001$) and academic responsibility ($\beta = .335$, $p < .001$). However, the two effects differed substantially in magnitude, a pattern that is both statistically robust and

theoretically informative. Among all predictors in the structural model, parental behavior ranked as the second-strongest predictor of academic motivation, exceeded only by perceived teachers' conscious discipline (β = .737). For academic responsibility, it ranked similarly as the second-strongest among external predictors. Critically, because academic responsibility emerged as the strongest direct predictor of achievement in the model (β = .646), the moderate upstream path from parental behavior to responsibility carries considerable downstream significance for academic achievement, an observation that cautions against dismissing smaller path coefficients in isolation from their structural position.

The difference in magnitude between the two paths is theoretically coherent. Parental academic involvement exerts a stronger influence on students' motivational orientation because motivational development is more immediately responsive to the affective quality of the parent–child relationship. Academic responsibility, by contrast, requires the sustained internalization of self-regulatory routines and a more protracted developmental trajectory before behavioral autonomy consolidates (Steinberg, 2001).

Both findings are well supported in the empirical literature. Regarding academic motivation, Froiland and Davison (2016) found in a longitudinal study that supportive parental involvement predicted later motivational and academic outcomes among adolescents. Similarly, Qu and Pomerantz (2015) reported that parental involvement enhanced children’s competence beliefs and intrinsic motivation over time. Regarding academic responsibility, Grolnick and Ryan (1989) found that structured, autonomy-supportive parenting predicted students’ academic self-regulation beyond general parental warmth. Likewise, Pinquart (2016) demonstrated in a meta-analysis that authoritative parenting styles were positively associated with academic achievement and adaptive student functioning. The comparatively stronger effects observed in the present study

may reflect the heightened cultural importance of family educational involvement in the Ethiopian context, where parental responsibility for children's schooling is strongly emphasized socially and culturally (Serbessa, 2006).

Self-determination theory (Ryan & Deci, 2000) provides a unifying theoretical framework for both pathways, though through distinct motivational mechanisms. For academic motivation, parents who provide structured academic guidance, communicate expectations, and respond to effort with encouragement rather than criticism support students' basic psychological needs for autonomy, competence, and relatedness, thereby facilitating the internalization of motivation from external regulation to more autonomous forms. Grolnick and Slowiaczek (1994) conceptualized this process through behavioral, cognitive, and personal involvement pathways that transmit academic values and engagement. For academic responsibility, Zimmerman's (2002) self-regulated learning framework similarly describes how external regulation is gradually transformed into autonomous self-regulation through modeling, structured routines, and guided practice that students internalize as self-regulatory habits. Across the broader empirical literature, parental involvement has consistently been associated with students' motivational development and self-regulatory functioning (Grolnick & Ryan, 1989; Pomerantz et al., 2007). In the Ethiopian context, Kassaw et al. (2024) and Dagnew (2017) confirmed that parental encouragement was significantly associated with students' motivational orientation.

In sum, parental behavior serves as a dual intrapersonal resource, cultivating both the motivational drive and the self-regulatory accountability that the present study identifies as the two most proximal determinants of academic achievement. Section 5.4 examines the pathways through which these intrapersonal resources mediate parental behavior's influence on achievement outcomes.

5.3.2. Parenting Style as a Predictor of Academic Motivation and Responsibility

The structural analysis showed that parenting style had statistically significant positive effects on both academic motivation ($\beta = .290$, $p = .002$) and academic responsibility ($\beta = .135$, $p = .004$). By Cohen's (1988) conventions, the effect on motivation is moderate, whereas the effect on responsibility, though small, is statistically reliable, as evidenced by significant critical ratios and confidence intervals that exclude zero. Both paths confirm that the broader emotional and structural climate of the parent–child relationship independently shapes students' motivational orientation and sense of academic ownership, over and above the discrete academic behaviors parents enact and the disciplinary practices students perceive from their teachers.

Situating these findings within the overall structural model is analytically essential. Rather than a specific set of academic behaviors, parenting style serves as a distal influence on students' motivational and behavioral orientations. Its effects on motivation are less direct than those of specific parental behaviors ($\beta = .634$) or teachers' conscious discipline ($\beta = .737$), and its relationship to academic responsibility is less direct than that of academic motivation itself ($\beta = .646$). This hierarchical pattern is theoretically expected: a relational climate establishes the affective and structural conditions within which more proximal influences, particularly parenting behaviors and teacher interactions, exert their direct effects. Nonetheless, given that academic responsibility is the model's strongest direct predictor of academic achievement, even the small upstream influence of parenting style on responsibility retains meaningful downstream significance for achievement.

The motivational finding aligns with an established body of scholarship linking authoritative parenting to adolescents' academic engagement. Steinberg et al. (1992) found that adolescents raised in authoritative households reported higher levels of school engagement and

academic adjustment than those raised under authoritarian or permissive parenting styles. Areepattamannil and Freeman (2008) likewise found that parental support was associated with adolescents' academic motivation and self-efficacy, partly through enhanced perceptions of competence and support. Pinquart (2016) further confirmed, through meta-analytic evidence, that authoritative parenting is positively associated with academic achievement and related motivational outcomes across diverse cultural contexts. The present moderate effect ($\beta = .290$) is broadly consistent with this literature, suggesting that parenting style exerts a meaningful motivational influence that may be particularly salient in contexts such as Ethiopia, where family involvement plays a central role in students' educational development (Assefa & Sintayehu, 2019).

Regarding academic responsibility, the literature documents modest yet reliable associations between parenting style and students' adaptive academic functioning. Pinquart (2016) reported that authoritative parenting is positively associated with adolescents' academic achievement, reflecting broader adaptive developmental outcomes. Aunola et al. (2000), using a longitudinal design, found that authoritative parenting predicted more adaptive achievement strategies and motivational orientations over time, which, in turn, supported better academic persistence and performance trajectories. The small but significant effect observed in the present study ($\beta = .135$) is consistent with this general pattern of modest parenting effects on behavioral academic outcomes. The comparatively weaker magnitude relative to motivational variables may reflect the more distal nature of parenting style as a contextual influence, which primarily shapes responsibility through intermediate processes such as self-regulatory skill development and experiential academic practice.

Theoretically, both pathways are grounded in self-determination theory (Ryan & Deci, 2000), which identifies the family relational climate as a primary context for satisfying or

frustrating children's basic psychological needs for autonomy, competence, and relatedness. Authoritative parenting, characterized by democratic communication, emotional responsiveness, and the provision of reasoned expectations, fulfills these needs in ways that foster internalized, self-determined motivation: children come to experience learning as personally meaningful rather than externally compelled. Baumrind's (1991) typology complements this account by identifying high responsiveness paired with high demandingness as uniquely effective in communicating both the importance and the attainability of academic goals—conditions that jointly activate motivational investment and cultivate volitional rather than reluctant compliance. For academic responsibility, the same relational conditions support an internalization process through which externally imposed academic demands are progressively appropriated as personally valued commitments. Zimmerman's (2002) self-regulated learning framework situates this responsibility pathway developmentally, noting that parenting style furnishes the earliest relational template for children's self-regulatory habits, even as its direct influence becomes progressively attenuated with the development of autonomous self-regulatory capacities in adolescence. Within the Ethiopian context, Feyisa and Gonfa (2024) found that students from structured, supportive family environments demonstrated significantly stronger motivational orientations, while Assefa and Sintayehu (2019) reported that positive family relational quality was associated with students' academic self-regulation and task persistence in secondary school settings.

In sum, the significant direct effects of parenting style on academic motivation ($\beta = .290$) and academic responsibility ($\beta = .135$) establish the broader family relational climate as an independent upstream influence on students' academic achievement. These findings confirm that how parents relate to their children, not only the specific academic behaviors they enact, shapes both the internal motivational drive students bring to learning and the sense of ownership they

exercise over their academic responsibilities. Although both effects are more distal than those of specific parental behaviors and teacher influences, they are neither negligible nor theoretically inconsequential, particularly given the downstream significance of motivation and responsibility as the study's proximal determinants of academic achievement.

5.3.3. Students' Perceptions of Teachers' Conscious Discipline as a Predictor of Academic Motivation and Responsibility

Structural analysis showed that perceived teacher conscious discipline (PTCD) was a statistically significant predictor of both academic motivation ($\beta = .737$, $p < .001$) and academic responsibility ($\beta = .312$, $p < .001$). The effect on motivation was the strongest among all predictors in the structural model, surpassing parental behavior ($\beta = .634$) and parenting style ($\beta = .290$). The effect on responsibility, moderate-to-large by Cohen's (1988) standards, was comparable to parental behavior ($\beta = .335$) and substantially exceeded parenting style ($\beta = .135$). Critically, because academic motivation ($\beta = .603$) and academic responsibility ($\beta = .646$) are the strongest direct predictors of academic achievement, these paths constitute the most influential indirect routes through which environmental factors shape students' academic achievement, positioning the classroom as the dominant proximal context for secondary school academic achievement.

These findings align with a well-established body of empirical research. Roorda et al. (2011), in a meta-analysis of 99 studies, demonstrated that positive teacher–student relationships are moderately associated with student engagement and achievement, underscoring the central role of relational classroom processes. Gunter et al. (2012) likewise found that supportive teacher–student interactions and effective classroom management were positively associated with student engagement and academic achievement. Havik et al. (2015) reported that perceived teacher support was linked to higher student engagement and persistence, underscoring its importance for

sustained academic involvement. Drawing on self-determination theory, Reeve (2006) further emphasizes that teacher emotional support and autonomy-supportive practices foster students' intrinsic motivation and engagement. The observed effect size for academic responsibility (β = .312) is broadly consistent with these meta-analytic findings, indicating a stable and meaningful association between supportive classroom relationships and students' academic functioning across contexts.

Self-determination theory (Ryan & Deci, 2000) provides the theoretical framework for both pathways. Teachers who demonstrate genuine empathy fulfill students' need for relatedness; those who offer consistent encouragement and communicate positive expectations strengthen students' perceived competence; and those who maintain composure under pressure create a psychologically safe environment in which intellectual risk-taking and sustained engagement become possible. The cumulative effect of these dimensions is a classroom climate in which all three basic psychological needs, autonomy, competence, and relatedness, are reliably met, creating the conditions necessary for fully internalized, autonomous motivation. For academic responsibility, teachers who practice conscious discipline establish autonomy-supportive conditions in which accountability is framed as a shared relational value rather than an externally imposed obligation, thereby cultivating students' ownership of their academic commitments as self-endorsed rather than compelled behavior. Particularly relevant here is the composure dimension of TCD: teachers who model emotional steadiness under pressure demonstrate self-regulatory behavior that students vicariously internalize and enact in their own academic conduct (Bandura, 1986). Within the Ethiopian context, where teachers are traditionally regarded as mentors whose approval carries exceptional motivational weight and moral authority (Aynalem et al., 2022), both effects may be meaningfully amplified relative to Western norms.

To sum up, perceived teacher conscious discipline is the strongest environmental predictor of academic motivation and a substantively meaningful predictor of academic responsibility in the present structural model. These findings establish the teacher's socio-emotional presence as the primary engine of student motivational development and a significant cultivator of behavioral self-regulation, positioning conscious classroom practice as the dominant indirect driver of academic achievement among secondary school students.

5.4. Academic Motivation and Responsibility as Mediators of the Effect of Family-Related Factors and Students' Perceptions of Teachers' Conscious Discipline on Academic Achievement

5.4.1. Academic Motivation as a Mediator between Parental Behavior and Academic Achievement

The present study's finding that academic motivation partially mediates the relationship between parental behavior and academic achievement aligns with a broader developmental pattern in which family environments shape students' motivational orientation, and this orientation, in turn, fuels sustained effort and goal commitment that support academic achievement. The mediation analysis confirmed a statistically significant specific indirect effect via academic motivation ($\beta = .258$, $p < .001$). The direct effect of parental behavior on achievement remained significant after the mediator was introduced ($\beta = .109$, $p = .009$), confirming partial rather than full mediation. Thus, parental behavior influences achievement both directly, through instructional scaffolding and structured academic support, and indirectly, through students' academic motivation, with a combined total effect of $\beta = .806$, $p < .001$.

This mediating process is grounded in self-determination theory (Ryan & Deci, 2000), which identifies parental fulfillment of students' basic psychological needs: autonomy, competence, and relatedness as the mechanism through which behavioral involvement shifts motivational regulation from externally controlled compliance toward fully internalized, self-determined engagement. Students operating from internalized motivation deploy deeper cognitive strategies and sustain greater effort and persistence in the face of academic difficulty (Vansteenkiste et al., 2004). Complementarily, expectancy-value theory (Eccles & Wigfield, 2002) explains how parents who communicate that academic success is both meaningful and attainable directly cultivate the task values and expectancy beliefs that most proximately drive achievement effort pathways. This link has been empirically confirmed by Froiland and Davison (2016) in longitudinal research linking parental academic support to intrinsic motivation.

The partial mediation pattern aligns with Bronfenbrenner's (1979) ecological systems framework, in which parental behaviors serve as proximal processes that produce both direct effects on achievement and the internal motivational resources students bring to academic work. Academic motivation thus serves as a bridge, transforming family-derived encouragement into the autonomous, goal-directed behavior that most directly drives achievement. The residual direct effect ($\beta = .109$, $p = .009$) confirms that structured parental behaviors (homework supervision, resource provision, and study routine maintenance) retain an independent instructional influence on achievement that no psychological mediator fully absorbs (Patall et al., 2008), making parental behavior a unique dual-channel predictor of academic achievement.

Cross-cultural evidence further supports this integrated pathway. Research consistently shows that parental academic involvement is linked to students’ academic achievement through motivational mechanisms, and indirect effects remain significant even after controlling for direct

effects (Fan & Williams, 2010; Jeynes, 2012; Wilder, 2014). In Ethiopia, Kassaw et al. (2024) and Dagnew (2017) found that parental encouragement predicted achievement by strengthening motivational orientation, while Assefa and Sintayehu (2019) noted that this motivational pathway is culturally amplified in Ethiopia, where family academic investment carries collective meaning that reinforces students' intrinsic engagement beyond Western benchmarks. Academic motivation is, therefore, not merely a correlate of parental behavior and achievement but an active developmental mechanism, the channel through which parental investment is partially converted into measurable academic achievement among secondary school students.

5.4.2. Academic Motivation as a Mediator between Parenting Style and Academic Achievement

The present study's finding that academic motivation fully mediates the relationship between parenting style and academic achievement highlights a broader developmental process in which the emotional and structural characteristics of the family environment shape students' motivational orientations. These orientations, in turn, guide the effort, persistence, and goal-directed engagement through which academic achievement is attained. Students who experience warm, structured, and autonomy-supportive family environments are more likely to approach learning with genuine intrinsic interest and a sense of self-determined purpose. This enhanced motivational orientation serves as a key pathway through which parenting style is associated with improved academic achievement. Thus, parenting style influences secondary school achievement entirely and exclusively through its cultivation of students' academic motivation; its effect on outcomes is carried entirely by the motivational resources students internalize from the family relational climate (indirect effect: $\beta = .161$, $p = .002$; direct effect: $\beta = .015$, $p = .706$).

The full mediation observed in this study aligns with Baumrind's (1991) conceptualization of parenting style as a broad socialization climate that operates exclusively through psychological internalization rather than direct behavioral transmission. From this perspective, the family relational climate serves as a foundational motivational context, providing autonomy support, emotional security, and structured expectations within which students' self-determined academic engagement develops. This proximal psychological mechanism explains how the family's relational quality translates into measurable academic outcomes (Bronfenbrenner, 1979; Ishak et al., 2012). Academic motivation thus functions as a bridge, transforming family-derived warmth, structure, and autonomy support into the internalized, goal-directed behavior that most directly drives achievement, leaving no residual direct pathway from parenting style to outcomes once this motivational channel is modeled.

Cross-cultural research further supports this fully mediated pathway. Existing studies consistently show that, when motivational and self-regulatory mechanisms are included in the model, the relationship between parenting style and academic achievement is largely explained by these mediators. This evidence suggests that the association between parenting style and academic outcomes operates primarily through students’ motivation and self-regulation rather than through a direct pathway (Areepattamannil, 2008; Hwang & Jung, 2021; Pinquart, 2016). In the Ethiopian context, Feyisa and Gonfa (2024) reported that students from structured and supportive family environments demonstrated significantly stronger motivational orientations, while Assefa and Sintayehu (2019) confirmed that family relational quality predicted achievement indirectly through students' motivational engagement. These converging findings emphasize that academic motivation is not merely a psychological outcome of the family relational climate but a key developmental mechanism through which the warmth, structure, and autonomy support provided

by parenting styles are associated with improved academic achievement among secondary school students.

5.4.3. Academic Motivation as a Mediator between Students' Perceptions of Teachers' Conscious Discipline and Academic Achievement

Academic motivation fully mediated the relationship between perceived teachers' conscious discipline and academic achievement (indirect $\beta = .321$, $p < .001$; direct $\beta = .033$, $p = .568$), indicating that conscious disciplinary practices influence achievement entirely through students' motivational orientation rather than through a direct effect. Students who perceive their teachers as empathetic, encouraging, and emotionally composed are more likely to develop stronger intrinsic motivation, greater engagement, and sustained commitment to academic tasks, which are subsequently associated with improved academic achievement. The non-significant direct path confirms that once academic motivation is accounted for, teachers' conscious discipline no longer independently predicts achievement.

Consistent with self-determination theory (Ryan & Deci, 2000), conscious discipline practices fulfill students' needs for relatedness (through teacher empathy), competence (through encouragement), and autonomy (within emotionally secure environments), thereby facilitating the internalization of academic motivation. As students transition from externally regulated participation to autonomous engagement, their motivational resources strengthen. Empirical evidence supports this mechanism, showing that teachers' emotional responsiveness predicts intrinsic motivation (Aldrup et al., 2020; Roorda et al., 2011). Full mediation has been consistently documented, with socio-emotional practices influencing achievement exclusively through motivational processes (Jennings & Greenberg, 2009). From an ecological systems perspective (Bronfenbrenner, 1979), teachers' conscious discipline can be understood as a proximal classroom

process that shapes students' motivational development. This mechanism may be particularly influential during secondary education, when adolescents' academic adjustment is highly responsive to the quality of teacher–student relationships (Aldrup et al., 2020).

Cross-cultural evidence, including in the Ethiopian educational context where teachers serve as mentors with substantial motivational influence (Aynalem et al., 2022), likewise confirms that positive teacher-student relationships indirectly contribute to achievement through motivational engagement (Assefa & Adane, 2018; Dugassa et al., 2026). Collectively, these findings establish academic motivation not merely as an emotional consequence of conscious discipline but as the central developmental mechanism through which teachers' empathy, encouragement, emotional composure, and positive intent translate into observable academic success among secondary school students.

5.4.4. Academic Responsibility as a Mediator between Parental Behavior and Academic Achievement

The finding that academic responsibility partially mediated the relationship between parental behavior and academic achievement (indirect $\beta = .324$, $p < .001$; direct $\beta = .109$, $p = .009$) indicates that supportive parental practices, such as encouragement, monitoring, and academic support, foster students' accountability for learning, which in turn promotes academic achievement. This indirect pathway suggests that parental behavior contributes to achievement not only directly but also by developing students' responsible academic behaviors (e.g., persistence, task completion, and self-regulation).

Consistent with social–cognitive theory (Bandura, 1986), supportive parental interactions provide behavioral modeling and reinforcement that facilitate the internalization of self-regulatory

and responsibility-related competencies. From an ecological systems perspective (Bronfenbrenner, 1979), family interactions serve as proximal developmental processes through which students acquire adaptive academic behaviors that support positive educational outcomes. Academic responsibility, therefore, serves as a developmental bridge, transforming parental support, supervision, and encouragement into disciplined, goal-directed academic behavior that enhances achievement.

Empirical evidence further supports this mediating pathway. Notably, responsibility emerged as a stronger mediator (β = .324) than academic motivation (β = .258) in relation to parental behavior, suggesting that instilling duty-oriented beliefs may be more potent than fostering motivation alone. This finding aligns with prior empirical evidence showing that positive parental behavior predicts achievement indirectly through self-regulation and academic engagement (Fan & Williams, 2010; Gonida & Cortina, 2014; Pinquart, 2016). Collectively, these results indicate that academic responsibility is not merely a behavioral outcome of positive parenting but a central psychological mechanism through which parental support is translated into measurable academic achievement.

5.4.5. Academic Responsibility as a Mediator between Parenting Style and Academic Achievement

Academic responsibility significantly mediated the relationship between parenting style and academic achievement. The indirect pathway through responsibility was statistically significant (β = *.148*, *p* = *.004*), whereas the direct effect of parenting style on achievement was negligible (β = *.015*, *p* = *.672*). In contrast, parenting style showed a strong association with academic responsibility (β = *.135*, *p* = *.003*). This pattern of coefficients, with a non-significant direct path and a significant indirect pathway, indicates full mediation, revealing that parenting

style influences academic achievement almost entirely through students' internalized sense of responsibility rather than through the direct transmission of achievement-related skills or supervisory effects.

The mediating role of academic responsibility aligns with Baumrind's (1991) conceptualization of parenting as a developmental context that shapes children's internalized self-regulation and behavioral standards. Supportive parenting does not drive achievement through direct supervision alone; instead, it creates conditions in which adolescents develop self-generated responsibility, a proximal mechanism that translates the emotional warmth, structure, and explicit expectations present in the parenting relationship into sustained academic engagement and achievement-oriented behavior.

Substantial empirical evidence supports this interpretation. Prior research consistently shows that responsive, autonomy-supportive parenting environments predict higher levels of academic responsibility and self-discipline, which, in turn, predict stronger academic performance (Pinquart, 2016; Teuber et al., 2022; Vasquez et al., 2016). Work grounded in social-cognitive and self-regulation theory further shows that adolescents who experience responsive parenting internalize achievement-related responsibilities and develop effective learning habits that facilitate success (Soenels & Vansteenkiste, 2010; Zimmerman, 2008). Importantly, these convergent findings suggest that academic responsibility is not merely a correlate of successful students but a critical developmental pathway through which parenting practices influence secondary school academic achievement. This distinction has important implications: interventions targeting parental behavior may yield greater gains when they emphasize cultivating student responsibility rather than providing direct academic support.

5.4.6. Academic Responsibility as a Mediator between Students' Perceptions of Teachers' Conscious Discipline and Academic Achievement

Academic responsibility fully mediated the relationship between perceived teachers' conscious discipline and academic achievement (indirect $\beta = .171$, $p < .001$; direct $\beta = .033$, $p = .568$), indicating that conscious disciplinary practices influence achievement exclusively through fostering students' sense of academic accountability rather than through a direct effect. Students who perceive emotionally supportive, respectful, and self-regulation-oriented discipline internalize academic obligations, regulate their behavior, assume ownership of their learning, and consequently demonstrate greater persistence and goal-directed engagement. The non-significant direct path confirms that once academic responsibility is accounted for, teachers' conscious discipline no longer independently predicts achievement.

The fully mediated relationship aligns with self-determination theory (Ryan & Deci, 2000), which holds that teachers who employ empathy, encouragement, and constructive guidance create psychologically supportive classrooms that satisfy students' needs for autonomy, competence, and relatedness, thereby facilitating the internalization of behavioral regulation. Social cognitive theory (Bandura, 1986) further explains that teachers who demonstrate calmness and emotional awareness serve as behavioral models for self-control and accountable decision-making, fostering self-regulatory competencies that directly support academic achievement. Together, these perspectives establish academic responsibility as the developmental mechanism through which conscious discipline translates into student success.

These findings align with a robust body of empirical research showing that teacher–student relationships are central to students' academic engagement, motivation, and achievement. Roorda et al. (2011), in a meta-analysis of 99 studies, found that positive teacher–student relationships are

moderately to strongly associated with students' engagement and achievement, underscoring the critical role of relational classroom processes in shaping learning outcomes. Building on this evidence, Wentzel (2012) emphasized that supportive teacher behaviors foster students' prosocial academic goals and sense of responsibility by promoting belonging and active engagement in school tasks. More recent longitudinal and meta-analytic studies further support these findings, showing that autonomy-supportive and emotionally responsive teaching practices are linked to higher intrinsic motivation and self-regulated learning by satisfying students' basic psychological needs (Cheon et al., 2023; Jang et al., 2016; Ryan & Deci, 2017). Similarly, Aldrup et al. (2022) reported that teachers' emotional support and relationship quality predict student engagement and academic functioning through motivational and emotional pathways, underscoring the mediating role of engagement in academic development. Collectively, these findings suggest that academic responsibility is a key mechanism linking positive teacher–student relationships to improved academic outcomes across diverse educational contexts.

5.5. Implications of the Study

This section outlines the study's implications, explicitly grounded in its research objectives and empirical findings. The discussion is organized into theoretical and practical dimensions, reflecting the relationships among family-related variables (parenting style and parental behavior), perceived teachers' conscious discipline, intrapersonal constructs (academic motivation and academic responsibility), and academic achievement among secondary school students.

5.5.1. Theoretical Implications

The findings of this study have several theoretically meaningful implications for developmental and educational research. First, the study provides empirical support for multilevel mechanisms of academic achievement. Consistent with the study's primary objective, the results

showed that family-related factors (parenting style and parental behavior), perceived teachers' conscious discipline, academic motivation, and academic responsibility each significantly contributed to academic achievement among secondary school students. This finding reinforces Ecological Systems Theory (Bronfenbrenner, 1979) and Self-Determination Theory (Ryan & Deci, 2000) by confirming that adolescent academic achievement emerges from an integrated system of distal family influences, proximal classroom experiences, and internalized psychological resources.

However, both theories have important limitations that the present study helps address. Ecological Systems Theory emphasizes nested environmental systems but has less often specified the precise psychological mechanisms by which microsystem influences (home and classroom) translate into academic achievement, especially in non-Western secondary-school settings. Self-Determination Theory has extensively documented the role of autonomy-supportive environments in fostering motivation, yet the joint operation of students' perceptions of teachers' conscious discipline practices and family processes, and the additional mediating role of academic responsibility, have received limited theoretical attention. By simultaneously modeling these pathways, the study extends both frameworks: it demonstrates that structured and supportive family environments and emotionally regulated teacher–student interactions contribute to achievement not only by enhancing autonomous motivation but also by cultivating students' sense of academic responsibility. In doing so, it offers a more differentiated account of the mediational processes linking distal and proximal contexts to academic achievement.

Second, this study clarifies the mechanistic role of intrapersonal factors, particularly academic responsibility, in mediating the effects of environmental influences on academic achievement. Existing developmental and achievement models have often treated motivation and

self-regulation as closely related or overlapping constructs, without clearly distinguishing their contributions. The strong mediating effects of academic motivation and responsibility indicate that environmental resources (family practices and teacher behaviors) influence achievement primarily through indirect paths, operating mainly through students' active internalization of motivational and self-regulatory processes. Critically, academic responsibility emerged as the strongest direct predictor of achievement ($\beta = .646$) and as a significant mediator of both parenting style and student-perceived teachers' conscious discipline. This precision advances theoretical refinement by distinguishing between motivational engagement and behavioral responsibility, constructs frequently conflated in prior research, and by demonstrating their differential predictive power.

Third, the results strengthen multidimensional conceptualizations of parenting and teacher influence. Prior applications of family-systems and teacher-effectiveness frameworks have often treated parenting style and parental behavior, or teacher relational qualities, as relatively unitary constructs. By simultaneously examining parenting style (relational climate) and parental behavior (discrete practices), the study demonstrates that the family environment operates through both distal relational and proximal behavioral channels. The differential effects observed, with stronger direct effects for parental behavior and stronger mediated effects for parenting style, provide empirical justification for conceptualizing parenting as a differentiated system. Similarly, the finding that student-perceived teachers' conscious discipline (empathy, encouragement, composure, and positive intent) operates almost exclusively through motivational and responsibility-mediated pathways contributes theoretical precision: it establishes that teacher socio-emotional competence influences achievement less through direct instructional effects and more through its capacity to cultivate students' internal psychological resources.

Fourth, the findings extend the applicability of family-systems, self-determination, and self-regulated learning frameworks to the Ethiopian secondary-school context. These frameworks were developed and validated primarily in Western samples, leaving open questions about their explanatory power across diverse sociocultural and educational conditions. The present study demonstrates that the core constructs retain strong predictive validity in Ethiopian schools. The large effect sizes observed (particularly for teachers' conscious discipline predicting motivation, $\beta = .737$, and academic responsibility predicting achievement, $\beta = .646$) suggest that the identified theoretical mechanisms may be cross-culturally robust and may be amplified by Ethiopian educational values that emphasize teacher authority, family investment in education, and collective responsibility. This contributes to the cumulative development of theory by situating existing models within a broader empirical landscape and affirming their generalizability beyond the contexts in which they were originally formulated.

Fifth, the study provides empirical evidence for the developmental importance of the secondary-school period. Developmental theories have long recognized adolescence as a period of increasing autonomy coupled with continued reliance on environmental scaffolding (Steinberg, 2001). Yet relatively few studies have tested how family and classroom influences are internalized through the dual pathways of motivation and academic responsibility during this stage. The strength of the observed effects, particularly the full mediation of both parenting style and student-perceived teachers' conscious discipline through these psychological mediators, suggests that secondary school is a developmental window in which the psychological internalization of external influences is especially salient. The findings therefore reinforce and refine developmental accounts by showing that the transition from parent-directed compliance to self-regulated responsibility is

a central mechanism through which family and classroom supports operate during secondary education.

5.5.2. Practical Implications

The practical implications of this study stem directly from the observed relationships among family-related factors, students' perceptions of teachers' conscious discipline, academic motivation, academic responsibility, and academic achievement. These implications are intended for school leaders, teacher educators, education authorities, and program designers who can translate research findings into practice. All suggested actions should be adapted to local cultural and resource contexts.

Family- and Parent-Engagement Implications

The findings indicate that parenting style and parental behavior substantially influence students' academic motivation, responsibility, and achievement. Because most parents do not access research literature, the following practical steps are recommended for institutions that work with families:

1. **Strengthen school-based parent-education programmes**

   Education bureaus and schools should design short, practical parent workshops that focus on two complementary skills: (a) creating a warm, structured home climate (authoritative parenting) and (b) concrete academic-support behaviors (homework routines, progress monitoring, and communication with teachers). These programs should use local languages, realistic examples, and interactive methods rather than theoretical lectures.

2. **Promote structured academic-support practices through school–home partnership mechanisms**

Schools can institutionalize simple, low-cost practices such as weekly homework-check systems, shared study-schedule templates, and brief parent–teacher communication cards. These mechanisms provide parents with concrete tools for behavioral support without requiring them to interpret research findings.

3. **Support gradual transfer of responsibility as adolescents mature**

   Parent-engagement programs and guidance services should help families shift, over time, from direct supervision to collaborative goal-setting and reflective feedback. This developmental shift can be built into existing secondary-school counseling or parent-meeting structures.

School and Classroom-Level Implications

Within schools, the strongest pathways to achievement ran through students' perceptions of teachers' conscious discipline, students' academic motivation, and academic responsibility. The following practical implications are therefore suggested for school leaders, teacher-training institutions, and education authorities:

1. **Prioritise socio-emotional competencies in teacher professional development**

   Continuous professional development (CPD) programs should systematically build teachers' skills in empathy, encouragement, emotional composure, and positive intent. These competencies showed the largest upstream effect on student motivation ($\beta = .737$) and therefore represent a high-leverage area for investment.

2. **Reframe teacher-effectiveness initiatives around motivational and responsibility pathways**

   Because student-perceived teachers' conscious discipline influenced achievement almost entirely through motivation and responsibility (full mediation), teacher-training and

appraisal systems should place greater emphasis on the classroom's relational and motivational climate rather than on instructional techniques alone.

3. **Design classroom and school systems that jointly cultivate motivation and responsibility**

   Schools should combine practices that foster intrinsic motivation (autonomy-supportive teaching and recognition of effort and growth) with systems that make academic responsibility visible and valued (student self-monitoring of task completion, progress tracking, and recognition of consistent accountability). Guidance and counseling units can play a coordinating role in these efforts.

4. **Emphasise specific communicative practices within conscious discipline**

   Professional development modules should give particular attention to the language and behaviors of encouragement and positive intent, which showed the strongest associations with achievement among the four dimensions of conscious discipline.

5. **Embed academic-responsibility development into school culture**

   School-wide initiatives, progress-monitoring systems, explicit instruction in goal-setting and time management, and recognition of persistence can be framed as tools for student empowerment rather than as mechanisms of external control. These systems align with the finding that academic responsibility was the strongest direct predictor of achievement ($\beta = .646$).

Student-Level Implications

The findings show that academic motivation and academic responsibility are the strongest direct predictors of academic achievement. This suggests that strengthening students'

intrapersonal capacities is a high-leverage area for school practice. Guidance and counseling units, together with classroom teachers, can support the development of self-regulated learning skills by integrating structured activities focused on goal setting, time management, persistence, and reflective learning into routine school programs. Autonomy-supportive classroom practices, such as involving students in setting academic goals and monitoring their own progress, can help shift learning from external regulation toward more self-determined and sustained engagement. These approaches align with the study's results and can be implemented within existing secondary-school structures without requiring major additional resources.

Counseling and Guidance Implications

The strong mediating roles of academic motivation and academic responsibility underscore the value of school-based counseling and guidance services in supporting students' psychological readiness to learn. Guidance and counseling units can contribute by designing and delivering structured programs that strengthen intrinsic motivation, self-regulated learning skills, and academic responsibility, for example, through short motivational enhancement sessions, study-skills workshops, and academic goal-setting activities. Counselors can also work with teachers to identify early signs of motivational difficulties and provide timely, targeted psychosocial support. In addition, brief responsibility-building components, such as goal monitoring, self-evaluation, and progress tracking, can be integrated into existing guidance activities so that these skills become part of routine school practice rather than isolated interventions.

Parent–School Partnership Implications

Because parental behavior, parenting style, and students' perceptions of teachers' conscious discipline operate through complementary pathways, stronger, more systematic collaboration between schools and families is warranted. Schools and education authorities can establish regular, low-burden communication channels, such as brief progress notes, structured parent–teacher meetings, or simple digital updates, to keep families informed about academic expectations and progress. They can also offer short, practical parent-education sessions delivered in local languages and focused on concrete academic-support behaviors, rather than theoretical presentations. These sessions can be organized by schools or woreda education offices and linked to existing parent-meeting structures. Treating parent engagement and classroom socio-emotional practices as mutually reinforcing rather than separate agendas will help ensure that consistent messages about motivation and responsibility are conveyed across home and school.

Policy and Administrative Implications

The substantial effects of student-perceived teacher conscious discipline have clear implications for teacher education and school management. Pre-service and in-service teacher training programs should systematically incorporate socio-emotional competencies, empathy, encouragement, emotional composure, and positive intent, alongside subject-matter and pedagogical content. Continuous professional development frameworks should give sustained attention to the relational and motivational dimensions of teaching. School improvement and teacher appraisal systems could usefully include indicators of teacher–student relational quality, recognizing that these qualities are strongly linked to student motivation and, indirectly, to achievement.

Intervention and Program Development Implications

The findings support coordinated, multi-level interventions rather than isolated efforts. Program designers and education authorities may consider school-based components that strengthen teachers' use of conscious discipline practices while building students' academic motivation and responsibility, alongside parallel, culturally adapted, parent-focused components that promote both emotional support and structured academic guidance. Implementation approaches should account for the resource constraints and cultural norms of Ethiopian secondary schools, prioritizing low-cost, scalable activities that can be integrated into existing school routines and parent-meeting structures. Such coordinated programs are likely to be more effective than single-domain interventions because they address both the environmental influences and the intrapersonal mechanisms identified in the study.

Chapter Six: Conclusion, Limitations, and Recommendations

6.1. Conclusion

The findings confirmed that family-related factors significantly influence academic achievement. Parental behavior emerged as a stronger predictor than parenting style, indicating that specific academic support practices (e.g., homework supervision, monitoring, and communication with teachers) have a more direct impact on achievement than the broader parenting climate.

The findings provide strong evidence for the central role of family-related factors in shaping academic achievement. Parental behavior and parenting style emerged as the strongest family-level correlates of the psychological processes that support academic achievement. These findings underscore the family's foundational role in creating the emotional and behavioral conditions that enable students to internalize motivation and responsibility. The varying strength of these associations indicates that, although relational warmth and structure are important, the concrete behavioral practices through which parents engage in their children's academic lives are even more influential. This suggests that families aiming to maximize academic achievement should focus substantially on actionable support rather than relying solely on the emotional climate.

Students' perceptions of teachers' conscious discipline showed a strong indirect effect on academic achievement through academic motivation and academic responsibility. The non-significant direct effect indicates that teachers' socio-emotional competencies primarily operate by shaping students' internal psychological resources rather than by directly improving academic achievement.

Students' perceptions of teachers' conscious discipline, characterized by empathy, encouragement, composure, and positive intent, emerged as the most influential classroom-level

factor shaping students' academic achievement. Mediation analyses indicated that its effects operate almost exclusively through the cultivation of students' academic motivation and responsibility rather than through direct instructional pathways. These findings highlight that, within the Ethiopian educational context, the relational and emotionally supportive dimensions of teaching are especially powerful in fostering the internal psychological resources that enable academic success.

Academic motivation and academic responsibility were confirmed as significant mediators linking environmental factors to academic achievement. Academic responsibility, in particular, was the strongest direct predictor of academic achievement, underscoring the central role of self-regulation and accountability in student success.

A central contribution of this study is clarifying the complementary mechanistic roles of academic motivation and academic responsibility in the pathway to achievement. Academic responsibility emerged as the strongest direct predictor of academic achievement, underscoring the immediate importance of students' behavioral self-regulation and accountability. At the same time, students' perceptions of teachers' deliberate discipline were the primary driver of academic motivation, whereas parental behavior most strongly shaped academic responsibility. Together, these findings highlight that schools and families play distinct yet mutually supportive roles in fostering the motivational and self-regulatory processes that promote academic achievement. This distinction is both theoretically and practically significant, as it shows that relying solely on schools to improve achievement through motivational engagement is insufficient without concurrent family involvement in developing students' behavioral accountability and self-regulatory discipline.

Optimal academic achievement occurs when three conditions align: supportive family environments characterized by clear structure, emotional warmth, and direct academic involvement; emotionally responsive classrooms where teachers demonstrate empathy, encouragement, and confidence in students; and students' internalized motivation and responsibility for learning. These levels function as an integrated developmental system, each creating conditions for the next. When families provide both emotional support and behavioral structure, students develop the confidence and foundational skills needed to respond to teachers' encouragement. When teachers create safe, responsive classroom environments, students develop intrinsic motivation to engage with academic content. When both family and classroom conditions are supportive, students internalize responsibility and commitment that sustain effort even in the face of academic challenges.

The study makes theoretical contributions by clarifying that parental influence operates through multiple channels, with relational climate and behavioral practices functioning both independently and through overlapping mechanisms. It also demonstrates that teacher emotional competence and communicative clarity, particularly encouragement and positive expectations, are especially influential in secondary schools, where adolescents place a strong emphasis on social recognition. Additionally, the findings indicate that motivation and responsibility are distinct mediating mechanisms with different upstream sources and complementary effects on achievement. By conducting this research in the Ethiopian context without altering core theoretical frameworks developed in Western samples, the study provides evidence that these mechanisms are robust across cultures.

In general, the results support an integrated ecological-psychological model in which family environments and teacher relational practices influence achievement indirectly by fostering

students' motivation and sense of responsibility. Academic achievement is therefore best understood as the outcome of interactions among family, school, and intrapersonal systems.

6.2. Limitations of the Study

The study provides strong evidence on the mechanisms by which family-related factors, students' perceptions of teachers' conscious discipline, and intrapersonal factors predict academic achievement among secondary school students in Ethiopia; however, it has several important limitations.

The first limitation concerns the cross-sectional research design. Because data were collected at a single point in time, the study cannot establish temporal order, reciprocal relationships, or causal direction among variables. Although structural analysis identified significant direct and indirect relationships, the findings do not show how these variables change over students' secondary school experiences. Longitudinal research would provide deeper insight into the developmental dynamics linking family influences, teacher practices, motivation, responsibility, and achievement.

The second limitation concerns the sample's generalizability. The sample was drawn from secondary schools in Debre Markos, East Gojjam Zone, which may limit the applicability of the findings to other regions and educational settings in Ethiopia. Cultural, socioeconomic, and institutional differences across regions may influence how the identified mechanisms operate. Future studies should therefore include more diverse, multi-regional samples to strengthen external validity.

A third limitation is reliance on student self-report measures for all constructs, including perceptions of parenting style, parental behavior, and students' perceptions of teachers' conscious discipline. Self-report data may be affected by social desirability, recall bias, and subjective

interpretation. Although validated instruments were used, students' perceptions may not fully reflect actual parental or teacher behaviors. Future studies should incorporate multiple data sources, such as teacher reports, classroom observations, behavioral records, and objective achievement indicators.

The fourth limitation is that the study did not experimentally test whether interventions targeting parenting practices, teacher discipline, motivation, or responsibility would directly improve academic achievement. Although significant mechanisms were identified, the practical effectiveness of interventions based on these findings remains uncertain. Experimental and quasi-experimental research is needed to determine whether strengthening these mechanisms yields measurable gains in academic achievement.

The fifth limitation concerns the scope of variables examined. The study focused on parenting style, parental behavior, teachers' conscious discipline, academic motivation, and academic responsibility, but excluded other potentially important influences, including socioeconomic status, parental education, self-efficacy, academic self-concept, resilience, and instructional quality. Including these variables in future research would provide a more comprehensive understanding of academic achievement.

Finally, the study relied primarily on quantitative methods, which may not fully capture the cultural meanings and lived experiences associated with parenting practices, teacher encouragement, motivation, and responsibility in Ethiopian secondary schools. Qualitative and mixed-methods studies would provide deeper insight into how these processes are understood and experienced by students, families, and teachers.

Addressing these limitations would strengthen future research on academic achievement in Ethiopian secondary schools and support the development of culturally responsive educational interventions.

6.3. Recommendations

Based on the empirical findings of this study, the following recommendations are offered to key stakeholders in Ethiopian secondary education.

6.3.1. For Families and Parent-Engagement Programmes

Parent-education programs organized by schools or education bureaus should emphasize both a warm, structured home climate and concrete academic support behaviors (homework routines, progress monitoring, and regular communication with teachers). These programs should be short, practical, delivered in local languages, and linked to existing parent-meeting structures. As students progress through secondary school, families should be supported in gradually shifting from direct supervision to collaborative goal-setting and greater student ownership of learning.

6.3.2. For Teachers and Teacher-Training Institutions

Pre- and in-service teacher education should systematically develop socio-emotional competencies, including empathy, encouragement, emotional composure, and positive intent, alongside subject knowledge and pedagogical skills. Professional development should place particular emphasis on the language and practices of encouragement and positive expectations, given their strong associations with student achievement. Teacher appraisal and continuous professional development frameworks should also recognize the quality of teacher–student relationships as an important dimension of effective teaching.

6.3.3. For Schools and School Leaders

Schools should establish classroom- and school-wide systems that jointly foster academic motivation and responsibility. These may include student goal-setting and self-monitoring practices, progress-tracking tools, recognition of persistence and accountability, and explicit instruction in self-regulation. School leaders should strengthen family–school partnerships through regular, low-burden communication channels and treat parent engagement and teacher socio-emotional development as complementary rather than separate priorities.

The findings also suggest that teacher effectiveness should be evaluated not only on instructional delivery but also on socio-emotional competence and relationship quality. School leaders should therefore incorporate indicators such as empathy, encouragement, and a supportive classroom climate into teacher development and evaluation systems.

6.3.4. For Education Authorities and Policymakers

Teacher-training curricula and continuous professional development policies should incorporate socio-emotional and relational competencies as core components. School improvement and teacher-evaluation frameworks could usefully include indicators of teacher–student relational quality. Multi-level intervention programs that simultaneously address teachers' conscious discipline practices, students' motivation and responsibility, and family academic-support behaviors should be prioritized, with careful adaptation to the resource constraints and cultural contexts of Ethiopian secondary schools.

6.3.5. For School Counsellors

School counseling and guidance units should design and implement structured, short-cycle programs that explicitly target the two strongest mediators identified in this study, academic motivation and academic responsibility. Recommended activities include brief motivational-

enhancement sessions, study-skills workshops, academic goal-setting exercises, and routine responsibility-building practices such as goal monitoring, self-evaluation, and progress tracking. Counselors should also collaborate with teachers to screen for early signs of motivational or self-regulatory difficulties and provide timely, targeted psychosocial support. Embedding these components into existing guidance activities will help ensure that the cultivation of motivation and responsibility becomes a sustained element of school practice rather than an isolated intervention.

6.3.6. Recommendations for Future Research

Future research should use longitudinal designs to examine developmental changes in motivation, responsibility, and achievement over time. Experimental and quasi-experimental studies are also needed to test interventions targeting parenting practices and teachers' use of conscious discipline. Additionally, future studies should incorporate multi-informant data, including parent and teacher reports and classroom observations, to reduce reliance on self-report measures. Expanding research to rural and diverse Ethiopian regions would further enhance generalizability. Mixed-methods approaches are also recommended to capture the cultural and contextual meanings of parenting and teaching practices.

References

Abebe, Y., Taddese, E. T., & Berhanu, K. Z. (2026). Predicting academic achievement through teachers' classroom management and students' classroom participation in Ethiopian secondary schools. *Discover Education*. https://doi.org/10.1007/s44217-026-01463-4

Abesha, A. G. (2012). *Effects of parenting styles, academic self-efficacy, and achievement motivation on the academic achievement of university students in Ethiopia* [Doctoral dissertation, Edith Cowan University]. https://ro.ecu.edu.au/theses/461

Abraham, H. (1996). Child rearing practices in Siltigna-speaking community: Impact on the development of independence and social responsibility. *In Proceedings of the Conference on the Situation of Children and Adolescents in Ethiopia*.

Adamma, O. N., Ekwutosim, O. P., & Unamba, E. C. (2018). Influence of extrinsic and intrinsic motivation on pupils' academic performance in mathematics. *Online Submission, 2*(2), 52–59. https://doi.org/10.35706/sjme.v2i2.1322

Ahmed, W., van der Werf, G., & Minnaert, A. (2010). Emotional experiences of students in the classroom: A multimethod qualitative study. *European Psychologist, 15*(2), 142–151. https://doi.org/10.1027/1016-9040/a000014

Amuzu, S. Y., Ankalazuku, A., & Abdulai, S. I. (2017). Low performance of pupils in BECE; A case study of Junior High Schools in the Agona East District. *International Journal of Advanced Research in Science, Engineering and Technology, 4*(7), 4134–4141. https://www.ijarset.com/upload/2017/july/3-IJARSET-Amuzu.pdf

Anderson, K. L., Nesbitt, K. T., Sheeks, N. A., Vrabec, A., Boris, K., & Fuhs, M. W. (2022). Executive function mediates the relationship between conscious discipline fidelity and kindergarten readiness. *Journal of Applied Developmental Psychology, 79,* Article 101393. https://doi.org/10.1016/j.appdev.2022.101393

Anderson, R. C. (2025). A longitudinal teacher case study on the development of creative self-regulation and agency. *Journal of Creative Behavior, 59,* Article e1534. https://doi.org/10.1002/jocb.1534

Areepattamannil, S., & Freeman, J. G. (2008). Academic achievement, academic self-concept, and academic motivation of immigrant adolescents in the greater Toronto area secondary schools. *Journal of Advanced Academics, 19*(4), 700–743. https://doi.org/10.4219/jaa-2008-831

Arda Tuncdemir, T. B., & Berk, S. (2025). Integrating social-emotional learning through play: Perspectives from early childhood educators. *Journal of Research in Childhood Education, 39*(1), 1–18. https://doi.org/10.1080/02568543.2025.2567504

Ary, D., Jacobs, L. C., Sorensen Irvine, C. K., & Walker, D. A. (2019). *Introduction to research in education* (10th ed.). Cengage Learning.

Asanre, A. A. (2024). Motivational factors as determinant of mathematics achievement of students in senior secondary schools. *Interdisciplinary Journal of Education Research, 6,* 1–9. https://doi.org/10.38140/ijer-2024.vol6.19

Assefa, A., & Sintayehu, B. (2019). Relationship between parental involvement and students' academic achievement in model primary and secondary school of Haramaya University, East Hararghe Zone, Oromia Regional State, Ethiopia. *International Journal of Education and Literacy Studies, 7*(2), 46–56. https://doi.org/10.7575/aiac.ijels.v.7n.2p.46

Aunola, K., Stattin, H., & Nurmi, J.-E. (2000). Parenting styles and adolescents' achievement strategies. *Journal of Adolescence, 23*(2), 205–222. https://doi.org/10.1006/jado.2000.0308

Ayenalem, K. A., Abate, S. G., Mengistie, T. A., Lakew, K. A., Ayana, A. M., & Yohannes, M. E. (2022). The attitude of Ethiopian secondary school teachers towards the teaching profession. *Teaching and Teacher Education, 117*, Article 103785. https://doi.org/10.1016/j.tate.2022.103785

Babbie, E. R. (2016). *The practice of social research* (14th ed.). Cengage Learning.

Bailey, B. A. (2015). *Conscious discipline: Building resilient classrooms*. Loving Guidance.

Banayad, F. N., Bona, S. M., Centeno, C. J., & Gallardo, A. (2024). The effects of authoritative and permissive parenting style on the Filipino students' academic achievement and social competence. *Proceedings of the International Conference on Future of Social Sciences, 1*(1), 9-22. https://doi.org/10.33422/icfss.v1i1.464

Bandura, A. (1977). *Social learning theory*. Prentice Hall.

Bandura, A. (1986). *Social foundations of thought and action: A social cognitive theory*. Prentice-Hall.

Barger, M. M., Kim, E. M., Kuncel, N. R., & Pomerantz, E. M. (2019). The relation between parents' involvement in children's schooling and children's adjustment: A meta-analysis. *Psychological Bulletin, 145*(9), 855–890. https://doi.org/10.1037/bul0000201

Baumrind, D. (1966). Effects of authoritative parental control on child behavior. *Child Development, 37*(4), 887–907. https://doi.org/10.2307/1126611

Baumrind, D. (1967). Child care practices anteceding three patterns of preschool behavior. *Genetic Psychology Monographs, 75*(1), 43–88.

Baumrind, D. (1971). Current patterns of parental authority. *Developmental Psychology*, *4*(1, Pt. 2), 1–103. https://doi.org/10.1037/h0030372

Baumrind, D. (1991). The influence of parenting style on adolescent competence and substance use. *Journal of Early Adolescence, 11*(1), 56–95. https://doi.org/10.1177/0272431691111004

Beaton, D. E., Bombardier, C., Guillemin, F., & Ferraz, M. B. (2000). Guidelines for the process of cross-cultural adaptation of self-report measures. *Spine*, *25*(24), 3186–3191. https://doi.org/10.1097/00007632-200012150-00014

Bempechat, J., & Shernoff, D. J. (2012). *Parental influences on achievement motivation and student engagement*. In S. L. Christenson, A. L. Reschly, & C. Wylie (Eds.), *Handbook of research on student engagement* (pp. 315–342). Springer. https://doi.org/10.1007/978-1-4614-2018-7_15

Bergin, C., & Bergin, D. (2014). *Child and adolescent development in your classroom* (2nd ed.). Cengage Learning.

Berhanu, K.Z. & Sabanci, A. (2020). Factors influencing university students' academic achievement and strategies taken to improve their achievement: Ethiopia as a sample. *Inonu University Journal of the Faculty of Education, 21*(3), 1165-1180. https://doi.org/10.17679/inuefd.559972

Berhanu, K.Z. & Sewagegn, A. (2024). The role of perceived campus climate in students' academic achievements as mediated by students' engagement in higher education institutions, *Cogent Education, 11*(1). https://doi.org/10.1080/2331186X.2024.2377839

Beyene, M., & Asgedom, A. (2025). A comparative study of parent engagement in homework: The case of private and government secondary schools in Addis Ababa. *International Journal of Progressive Education, 21*(2). https://doi.org/10.29329/ijpe.2025.1298.2

Bhardwaj, V., Zhang, S., Tan, Y. Q., & Pandey, V. (2025). Redefining learning: Student-centered strategies for academic and personal growth. *Frontiers in Education, 10,* Article 1518602. https://doi.org/10.3389/feduc.2025.1518602

Bonesrønning, H. (2004). Do the teachers' grading practices affect student achievement? *Education Economics, 12*(2), 151–167. https://doi.org/10.1080/0964529042000239168

Boomsma, A. (1982). The robustness of LISREL against small sample sizes in factor analysis models. In K. G. Jöreskog & H. Wold (Eds.), *Systems under indirect observation: Causality, structure, prediction* (Part I, pp. 149-173). North-Holland.

Bornstein, M. H. (2012). Cultural approaches to parenting. *Parenting: Science and Practice*, *12*(2-3), 212–221. https://doi.org/10.1080/15295192.2012.683359

Bowen, M. (1978). *Family therapy in clinical practice*. Jason Aronson.

Bowlby, J. (1982). *Attachment and loss: Vol. 1. Attachment* (2nd ed.). Basic Books. (Original work published 1969)

Brislin, R. W. (1970). Back-translation for cross-cultural research. *Journal of Cross-Cultural Psychology*, *1*(3), 185–216. https://doi.org/10.1177/135910457000100301

Bronfenbrenner, U. (1979). *The ecology of human development: Experiments by nature and design*. Harvard University Press.

Bronfenbrenner, U., & Morris, P. A. (2006). The bioecological model of human development. In R. M. Lerner & W. Damon (Eds.), *Handbook of child psychology: Vol. 1. Theoretical models of human development* (6th ed., pp. 793–828). John Wiley & Sons.

Bronstein, P., Ginsburg, G. S., & Herrera, I. S. (2005). Parental predictors of motivational orientation in early adolescence: A longitudinal study. *Journal of Youth and Adolescence, 34*(6), 559–575. https://doi.org/10.1007/s10964-005-8946-0

Byrne, B. M. (2016). *Structural equation modeling with AMOS: Basic concepts, applications, and programming* (3rd ed.). Routledge. https://doi.org/10.4324/9781315757421

Caldarella, P., Page, N. W., & Gunter, L. (2012). Early childhood educators' perceptions of conscious discipline. *Education, 132*(3), 589–599.

Carreres-Ponsoda, F., Escartí, A., Jimenez-Olmedo, J. M., & Cortell-Tormo, J. M. (2021). Effects of a teaching personal and social responsibility model intervention in competitive youth sport. *Frontiers in Psychology, 12,* Article 624018. https://doi.org/10.3389/fpsyg.2021.624018

Carroza-Pacheco, A. M., León-del-Barco, B., & Bringas Molleda, C. (2025). Academic performance and resilience in secondary education students. *Journal of Intelligence, 13*(5), 56.

Castro, M., Expósito-Casas, E., López-Martín, E., Lizasoain, L., Navarro-Asencio, E., & Gaviria, J. L. (2015). Parental involvement in student academic achievement: A meta-analysis. *Educational Research Review, 14,* 33–46. https://doi.org/10.1016/j.edurev.2015.01.002

Celik, O. (2024). Academic motivation in adolescents: The role of parental autonomy support, psychological needs satisfaction and self-control. *Frontiers in Psychology*, *15*, Article 1384695. https://doi.org/10.3389/fpsyg.2024.1384695

Chan, L. L., & Idris, N. (2017). Validity and reliability of the instrument using exploratory factor analysis and Cronbach's alpha. *International Journal of Academic Research in Business and Social Sciences*, *7*(10), 400–410. http://dx.doi.org/10.6007/IJARBSS/v7-i10/3387

Chao, R. K. (1994). Beyond parental control and authoritarian parenting style: Understanding Chinese parenting through the cultural notion of training. *Child Development*, *65*(4), 1111–1119. https://doi.org/10.2307/1131308

Checa, P., & Abundis-Gutiérrez, A. (2018). Parenting styles, academic achievement and the influence of culture. *Psychology and Psychotherapy: Research Study*, *1*(4). https://doi.org/10.31031/PPRS.2018.01.000518

Cheon, S. H., Reeve, J., & Marsh, H. W. (2023). Autonomy-supportive teaching enhances prosocial and reduces antisocial behavior via classroom climate and psychological needs: A multilevel randomized control intervention. *Journal of Sport and Exercise Psychology*. Advance online publication. https://doi.org/10.1123/jsep.2021-0337

Cheon, S. H., Reeve, J., & Song, Y. G. (2016). A teacher-focused intervention to decrease PE students' amotivation by increasing need satisfaction and decreasing need frustration. *Journal of Sport and Exercise Psychology*, *38*(3), 217–235. https://doi.org/10.1123/jsep.2015-0236

Cherie, A., & Berhanie, Y. (2015). Assessment of parenting practices and styles and adolescent sexual behavior among high school adolescents in Addis Ababa, Ethiopia. *Journal of AIDS & Clinical Research*. *6*(1), Article 424. https://doi.org/10.4172/2155-6113.1000424

Cheung, C. S., & Pomerantz, E. M. (2011). Parents' involvement in children's learning in the United States and China: Implications for children's academic and emotional adjustment. *Child Development*, *82*(3), 932–950. https://doi.org/10.1111/j.1467-8624.2011.01582.x

Chowa, G. A. N., Masa, R. D., & Tucker, J. (2013). The effects of parental involvement on academic performance of Ghanaian youth: Testing measurement and relationships using structural equation modeling. *Children and Youth Services Review*, *35*(12), 2020–2030. https://doi.org/10.1016/j.childyouth.2013.09.009

Cochran, W. G. (1977). *Sampling techniques* (3rd ed.). John Wiley & Sons.

Cohen, L., Manion, L., & Morrison, K. (2018). *Research methods in education* (8th ed.). Routledge.

Cohen, J. (1988). *Statistical power analysis for the behavioral sciences* (2nd ed.). Lawrence Erlbaum Associates.

Collaborative for Academic, Social, and Emotional Learning. (2020). *CASEL's SEL framework*: *What are the core competence areas and where are they promoted?* https://casel.org/fundamentals-of-sel/what-is-the-casel-framework/

Collier, J. E. (2020). *Applied structural equation modeling using AMOS: Basic to advanced techniques*. Routledge. https://doi.org/10.4324/9781003018414

Cooper, J. L. (2019). *The impact of conscious discipline on student behavior and teacher-student relationships* [Doctoral dissertation, Gardner-Webb University].

Cooper, L. A. (2019). Impact of conscious discipline on teacher efficacy and burnout: Perspectives for elementary teachers. *International Journal of Education Policy and Leadership*, *15*(14). https://doi.org/10.22230/ijepl.2019v15n14a882

Cornelius-White, J. (2007). Learner-centered teacher-student relationships are effective: A meta-analysis. *Review of Educational Research*, *77*(1), 113–143. https://doi.org/10.3102/003465430298563

Costa, A., Moreira, D., Casanova, J., Azevedo, Â., Gonçalves, A., Oliveira, Í., Azevedo, R., & Dias, P. C. (2024). Determinants of academic achievement in middle and secondary school education: A systematic review. *Social Psychology of Education*, *27*(6), 3533–3572. https://doi.org/10.1007/s11218-024-09941-z.

Cox, M. J., & Paley, B. (1997). Families as systems. *Annual Review of Psychology*, *48*, 243–267. https://doi.org/10.1146/annurev.psych.48.1.243

Crede, M., Tynan, M. C., & Harms, P. D. (2017). Much ado about grit: A meta-analytic synthesis of the grit literature. *Journal of Personality and Social Psychology*, *113*(3), 492–511. https://doi.org/10.1037/pspp0000102

Creswell, J. W., & Creswell, J. D. (2018). *Research design: Qualitative, quantitative, and mixed methods approaches* (5th ed.). Sage.

Cronbach, L. J. (1951). Coefficient alpha and the internal structure of tests. *Psychometrika*, *16*(3), 297–334. https://doi.org/10.1007/BF02310555

Cruickshank, J. (2012). Critical Realism and Post-Positivism. *In Encyclopedia of Philosophy and the Social Sciences*. SAGE.

Cupar, T., Klanjšek, R., Košir, K., Lavrič, M., & Vazsonyi, A. T. (2025). Effects of parenting styles on academic achievement: The moderating role of a country's economic

development. *Children and Youth Services Review*, *176*(Suppl. C), Article 108429. https://doi.org/10.1016/j.childyouth.2025.108429

Curtis, E. A., Comiskey, C., & Dempsey, O. (2016). Importance and use of correlational research. *Nurse Researcher*, *23*(6), 20–25. https://doi.org/10.7748/nr.2016.e1382

Dagnew, A. (2017). The relationship among parenting styles, academic self-concept, academic motivation and students' academic achievement in Fasilo secondary school, Bahir Dar, Ethiopia. *Research in Pedagogy*, *7*(2), 98–110. https://doi.org/10.17810/2015.76

Dagnew, A. (2017). The relationship between students' attitudes towards school, values of education, achievement motivation, and academic achievement in Gondar secondary schools, Ethiopia. *Research in Pedagogy*, *7*(1), 30–42.

Darling, N., & Steinberg, L. (1993). Parenting style as context: An integrative model. *Psychological Bulletin*, *113*(3), 487–496. https://doi.org/10.1037/0033-2909.113.3.487

Deci, E. L., & Ryan, R. M. (2000). The "what" and "why" of goal pursuits: Human needs and the self-determination of behavior. *Psychological Inquiry*, *11*(4), 227–268. https://doi.org/10.1207/S15327965PLI1104_01

Dehyadegary, E., Yaacob, S. N., Juhari, R. B., & Abu Talib, M. (2012). Relationship between parenting style and academic achievement among Iranian adolescents in Sirjan. *Asian Social Science*, *8*(1), 156–163. https://doi.org/10.5539/ass.v8n1p156

Dent, A. L., & Koenka, A. C. (2016). The relation between self-regulated learning and academic achievement across childhood and adolescence: A meta-analysis. *Educational Psychology Review*, *28*(3), 425–474. https://doi.org/10.1007/s10648-015-9320-8

Ding, G. (2014). *Parental behaviors and academic achievement* (Master's thesis/Research report). Education and Psychology.

Driscoll, A. K., Russell, S. T., & Crockett, L. J. (2008). Parenting styles and youth well-being across immigrant generations. *Journal of Family Issues*, *29*(2), 185–209. https://doi.org/10.1177/0192513X07307843

Duckworth, A. L., & Seligman, M. E. P. (2005). Self-discipline outdoes IQ in predicting academic performance of adolescents. *Psychological Science*, *16*(12), 939–944. https://doi.org/10.1111/j.1467-9280.2005.01641.x

Dugassa, L., Bekele, T., Alemnew, S. (2026). Influence of teacher–student relationships on the academic performance of secondary schools in Addis Ababa, Ethiopia. *Discover Education*, *5*, Article 360. https://doi.org/10.1007/s44217-026-01404-1

Eccles, J. S., & Wigfield, A. (2002). Motivational beliefs, values, and goals. *Annual Review of Psychology*, *53*, 109–132. https://doi.org/10.1146/annurev.psych.53.100901.135153

Eker, S., & Yildizli, H. (2025). The effect of perceived parental academic involvement on achievement: The mediating role of academic motivation. *Psychology in the Schools*. Advance online publication. https://doi.org/10.1002/pits.70036

Ekpe, I., Adelaiye, M. O., Adubasim, E. I., & Adim, V. C. (2014). The moderating effect of self-motivation on the relationship between parents' socio-economic background and children's academic performance at Nigerian Universities. *Asian Social Science*, *10*(21), 73-81. https://doi.org/10.5539/ass.v10n21p73

Elliot, A. J., & Hulleman, C. S. (2017). Achievement goals. In A. J. Elliot, C. S. Dweck, & D. S. Yeager (Eds.), *Handbook of competence and motivation: Theory and application* (2nd ed., pp. 43–60). The Guilford Press.

Elliot, S. N., Kratochwill, T. R., Cook, J. L., & Travers, J. (2000). *Educational psychology: Effective teaching, effective learning* (3rd ed.). McGraw-Hill.

Emagnaw, A. B. (2019). Self-regulated learning strategies and school performance in higher and lower students in secondary and preparatory school. *i-manager's Journal on School Educational Technology, 14*(4), 37–48. https://doi.org/10.26634/jsch.14.4.15914

Emiru, E. K. (2024). The effect of teacher self-efficacy on learning engagement of secondary school students. *Cogent Education, 11*(1), Article 2308432. https://doi.org/10.1080/2331186X.2024.2308432

Epstein, J. L. (2018). *School, family, and community partnerships: Preparing educators and improving schools* (2nd ed.). Routledge. https://doi.org/10.4324/9780429493133

Erentaitė, R., Vosylis, R., Sevalneva, D., Melnikė, E., Raižienė, S., & Daukantaitė, D. (2022). Profiles of achievement motivation and performance in middle school: Links to student background and perceived classroom climate. *Frontiers in Psychology, 13*, Article 952642. https://doi.org/10.3389/fpsyg.2022.820247

Ethiopian Monitor. (2023, October 9). *Grade 12 exam result: Only 27,000 students hit 50% mark.* https://ethiopianmonitor.com/2023/10/09/grade-12-exam-result-only-27000-students-hit-50-mark/

Ethiopian Monitor. (2024, September 9). *Grade 12 exams: Over 36,400 students score 50% and above.* https://ethiopianmonitor.com/2024/09/09/grade-12-exams-over-36-400-students-score-50-and-above/

Ethiopian Monitor. (2025, September 14). *Grade 12 exam results: 8.4% of the students get passing marks.* https://ethiopianmonitor.com/2025/09/14/grade-12-exam-results-8-4-of-the-students-hit-the-passing-mark/

Fan, X., & Chen, M. (2001). Parental involvement and students' academic achievement: A meta-analysis. *Educational Psychology Review, 13*(1), 1–22. https://doi.org/10.1023/A:1009048817385

Fan, X., & Williams, C. M. (2010). The effects of parental involvement on students' academic self-efficacy, engagement and intrinsic motivation. *Educational Psychology, 30*(1), 53–74. https://doi.org/10.1080/01443410903353302

Fantuzzo, J. W., Davis, G. Y., & Ginsburg, M. D. (1995). Effects of parent involvement in isolation or in combination with peer tutoring on student self-concept and mathematics achievement. *Journal of Educational Psychology, 87*(2), 272–281. https://doi.org/10.1037/0022-0663.87.2.272

Feng, X., Xie, K., Gong, S., Gao, L., & Cao, Y. (2019). Effects of parental autonomy support and teacher support on middle school students' homework effort: Homework autonomous motivation as mediator. *Frontiers in Psychology, 10*, Article 612. https://doi.org/10.3389/fpsyg.2019.00612

Feyisa, F. D., & Gonfa, M. A. (2025). Perceived parental engagement in improving students' academic achievement in Sululta sub-city secondary schools of Shaggar City Administration, Oromia Regional State. *Journal of Science, Technology and Arts Research, 14*(4), 76–93. https://doi.org/10.20372/star.V14.i4.06

Fornell, C., & Larcker, D. F. (1981). Evaluating structural equation models with unobservable variables and measurement error. *Journal of Marketing Research*, *18*(1), 39–50. https://doi.org/10.1177/002224378101800104

Fredrickson, B. L. (1998). What good are positive emotions? *Review of General Psychology, 2*(3), 300–319. https://doi.org/10.1037/1089-2680.2.3.300

Fredrickson, B. L. (2001). The role of positive emotions in positive psychology: The broaden-and-build theory of positive emotions. *American Psychologist, 56*(3), 218–226. https://doi.org/10.1037/0003-066X.56.3.218

Frisby, B. N., & Martin, M. M. (2010). Instructor–student and student–student rapport in the classroom. *Communication Education, 59*(2), 146–164. https://doi.org/10.1080/03634520903564362

Fritz, M. S., & MacKinnon, D. P. (2007). Required sample size to detect the mediated effect. *Psychological Science*, *18*(3), 233–239. https://doi.org/10.1111/j.1467-9280.2007.01882.x

Froiland, J. M., & Davison, M. L. (2016). Parental expectations and school relationships as contributors to adolescents' positive outcomes. *Social Psychology of Education*, *19*(4), 759–770. https://doi.org/10.1007/s11218-013-9237-3

FurtherAfrica. (2023, February 3). *Only 3% pass high school national exam in Ethiopia*. https://furtherafrica.com/2023/02/03/only-3-pass-high-school-national-exam-in-ethiopia/.

Fute, A., Oubibi, M., Sun, B., Zhou, Y., Bassiri, M., & Chen, G. (2024). Parenting for success: Exploring the link between parenting styles and adolescents' academic achievement through their learning engagement. *SAGE Open*, *14*(2). https://doi.org/10.1177/21582440241255176

Gawas, A. G. A. (2021). Parenting styles, social responsibility and their relationship to academic achievement among Yemeni high school students in Turkey. *International Journal of Social and Humanities Sciences Research (JSHSR)*, *8*(70), 1307–1315. https://doi.org/10.26450/jshsr.2430

Gebre, Z. A., Demissie, M. M., & Yimer, B. M. (2025). The impact of teacher socio-emotional competence on student engagement: A meta-analysis. *Frontiers in Psychology*, *16*, https://doi.org/10.3389/fpsyg.2025.1526371

Gebre, Z. A., Keery, Y. A., & Gemeda, T. T. (2026). Academic engagement and autonomous motivation: A study in south Ethiopia, secondary schools. *Cogent Education*, *13*(1). https://doi.org/10.1080/2331186X.2025.2564256

Gedamu, A. D. (2024). Classroom management practices of English language teachers in secondary schools [Preprint]. SSRN. https://papers.ssrn.com/sol3/papers.cfm?abstract_id=4663034

Global Education Monitoring Report Team. (2026). *Global education monitoring report 2026: Access and equity – Countdown to 2030*. UNESCO. https://doi.org/10.54676/JLKL3223

Gonida, E. N., & Cortina, K. S. (2014). Parental involvement in homework: Relations with parent- and student-achievement-related motivational beliefs and achievement. *British Journal of Educational Psychology*, *84*(3), 376–396. https://doi.org/10.1111/bjep.12039

Gonida, E. N., & Urdan, T. (2007). Parental influences on student motivation, affect, and academic behaviour: Introduction to the special issue. *European Journal of Psychology of Education*, *22*(1), 3–6. https://doi.org/10.1007/BF03173685

Gonzalez-DeHass, A. R., Willems, P. B., & Holbein, M. F. D. (2005). Examining the relationship between parental involvement and student motivation. *Educational Psychology Review*, *17*(2), 99–123. https://doi.org/10.1007/s10648-005-3949-7

Gravetter, F. J., & Wallnau, L. B. (2020). *Statistics for the behavioral sciences* (10th ed.). Cengage Learning.

Gregory, A., Clawson, K., Davis, A., & Gerewitz, J. (2016). The promise of restorative practices to transform teacher-student relationships and achieve equity in school discipline. *Journal of Educational and Psychological Consultation*, *26*(4), 325–353. https://doi.org/10.1080/10474412.2014.929950

Grolnick, W. S., & Ryan, R. M. (1989). Parent styles associated with children's self-regulation and competence in school. *Journal of Educational Psychology*, *81*(2), 143–154. https://doi.org/10.1037/0022-0663.81.2.143

Grolnick, W. S., & Slowiaczek, M. L. (1994). Parents' involvement in children's schooling: A multidimensional conceptualization and motivational model. *Child Development, 65*(1), 237–252. https://doi.org/10.2307/1131378

Gunter, L., Caldarella, P., Korth, B. B., & Young, K. R. (2012). Promoting social and emotional learning in preschool students: A study of Strong Start Pre-K. *Early Childhood Education Journal*, *40*(3), 151–159. https://doi.org/10.1007/s10643-012-0507-z

Gupta, P. K., & Mili, R. (2016). Relationship of academic motivation with academic achievement of high school students. *European Journal of Education Studies, 2*(10), 43–51. https://doi.org/10.5281/zenodo.321414

Hair, J. F., Black, W. C., Babin, B. J., & Anderson, R. E. (2009). *Multivariate data analysis* (7th ed.). Pearson Prentice Hall.

Hair, J. F., Black, W. C., Babin, B. J., & Anderson, R. E. (2019). *Multivariate data analysis* (8th ed.). Cengage Learning.

Hair, J. F., Hult, G. T. M., Ringle, C. M., & Sarstedt, M. (2017). *A primer on partial least squares structural equation modeling (PLS-SEM)* (2nd ed.). SAGE.

Hair, J. F., Jr., Gabriel, M. L. D. d. S., & Patel, V. K. (2014). AMOS Covariance-Based Structural Equation Modeling (CB-SEM): Guidelines on its application as a marketing research tool. *Brazilian Journal of Marketing*, *13*(2), 44–55. https://doi.org/10.5585/remark.v13i2.2718

Hair, J. F., Risher, J. J., Sarstedt, M., & Ringle, C. M. (2019). When to use and how to report the results of PLS-SEM. *European Business Review*, *31*(1), 2–24. https://doi.org/10.1108/EBR-11-2018-0203

Hamre, B. K., & Pianta, R. C. (2001). Early teacher–child relationships and the trajectory of children's school outcomes through eighth grade. *Child Development, 72*(2), 625–638. https://doi.org/10.1111/1467-8624.00301

Hamre, B. K., & Pianta, R. C. (2005). Can instructional and emotional support in the first-grade classroom make a difference for children at risk of school failure? *Child Development, 76*(5), 949–967. https://doi.org/10.1111/j.1467-8624.2005.00889.x

Hamre, B. K., & Pianta, R. C. (2008). Student–teacher relationships and the trajectory of children's school outcomes. *Child Development, 79*(2), 447–460. https://doi.org/10.1111/j.1467-8624.2007.01136.x

Hamre, B. K., & Pianta, R. C. (2020). *Classroom Assessment Scoring System (CLASS).* In Oxford Research Encyclopedia of Education. Oxford University Press. https://doi.org/10.1093/acrefore/9780190264093.013.904

Hamre, B. K., Pianta, R., Downer, J. T., DeCoster, J., Mashburn, A. J., Jones, S. M., Brown, J. L., Cappella, E., Atkins, M., Rivers, S. E., Brackett, M. A., & Hamagami, A. (2013). Teaching through interactions: Testing a developmental framework of teacher effectiveness in over 4,000 classrooms. *The Elementary School Journal, 113*(4), 461–487. https://doi.org/10.1086/669616

Harkin, J. (1998). *Teacher communication and classroom interaction*. Routledge.

Hassan, M., Malik, A. S., Sang, G., Rizwan, M., Mushtaque, I., & Naveed, S. (2022). Examine the parenting style effect on the academic achievement orientation of secondary school students: The moderating role of digital literacy. *Frontiers in Psychology*, *13*, Article 1063682. https://doi.org/10.3389/fpsyg.2022.1063682

Hattie, J. (2009). *Visible learning: A synthesis of over 800 meta-analyses relating to achievement.* Routledge. https://doi.org/10.4324/9780203887332

Hattie, J., & Yates, G. C. R. (2014). *Visible learning and the science of how we learn.* Routledge. https://doi.org/10.4324/9781315885025

Havik, T., Bru, E., & Ertesvåg, S. K. (2015). School factors associated with school refusal- and truancy-related reasons for school non-attendance. *Social Psychology of Education, 18*, 221–240. https://doi.org/10.1007/s11218-015-9293-y

Hayek, J., Schneider, F., Lahoud, N., Tueni, M., & de Vries, H. (2022). Authoritative parenting stimulates academic achievement, also partly via self-efficacy and intention towards getting good grades. *PLOS ONE, 17*(3). https://doi.org/10.1371/journal.pone.0265595

Hayes, A. F. (2018). *Introduction to mediation, moderation, and conditional process analysis: A regression-based approach* (2nd ed.). Guilford Press.

Henseler, J., Ringle, C. M., & Sarstedt, M. (2015). A new criterion for assessing discriminant validity in variance-based structural equation modeling. *Journal of the Academy of Marketing Science, 43*(1), 115–135. https://doi.org/10.1007/s11747-014-0403-8

Hill, M. (2017). *Elementary educators' perceptions of conscious discipline as a management strategy* [Honors thesis, University of Arkansas]. ScholarWorks@UARK. https://scholarworks.uark.edu/cieduht/15

Hill, N. E., & Tyson, D. F. (2009). Parental involvement in middle school: A meta-analytic assessment of the strategies that promote achievement. *Developmental Psychology, 45*(3), 740–763. https://doi.org/10.1037/a0015362

Hill, S. (2017). *Conscious discipline: A case study of teacher perceptions and classroom implementation* [Doctoral dissertation, University of Missouri-St. Louis]. IRL @ UMSL Repository.

Hockley, M., & Harkin, J. (2006). Communicating with students with learning difficulties in further education. *Educational Action Research, 8*(2), 341–360. https://doi.org/10.1080/09650790000200121

Hoffman, L. L., Hutchinson, C. J., & Reiss, E. (2009). On improving school climate: Reducing reliance on rewards and punishment. *International Journal of Whole Schooling, 5*(1), 13–24.

Hofkens, T. L., & Pianta, R. C. (2022). Teacher–student relationships, engagement in school, and student outcomes. In A. L. Reschly & S. L. Christenson (Eds.), *Handbook of research on student engagement* (2nd ed., pp. 431–449). Springer. https://doi.org/10.1007/978-3-031-07853-8_20

Holley, K. A., & Steiner, S. (2005). Safe space: Student perspectives on classroom environment. *Journal of Social Work Education, 41*(1), 49–64. https://doi.org/10.5175/JSWE.2005.200300343

Hooper, D., Coughlan, J., & Mullen, M. R. (2008). Structural equation modelling: Guidelines for determining model fit. *Electronic Journal of Business Research Methods*, *6*(1), 53–60. https://doi.org/10.21427/D7CF7R

Hoover-Dempsey, K. V., & Sandler, H. M. (1997). Why do parents become involved in their children's education? *Review of Educational Research, 67*(1), 3–42. https://doi.org/10.3102/00346543067001003

Hu, L. T., & Bentler, P. M. (1999). Cutoff criteria for fit indexes in covariance structure analysis: Conventional criteria versus new alternatives. *Structural Equation Modeling: A Multidisciplinary Journal*, *6*(1), 1–55. https://doi.org/10.1080/10705519909540118

Hwang, W., & Jung, E. (2021). Helicopter parenting versus autonomy supportive parenting? A latent class analysis of parenting among emerging adults and their psychological and relational well-being. *Emerging Adulthood, 10*(3), 731–743. https://doi.org/10.1177/21676968211000498

Jang, H., Kim, E. J., & Reeve, J. (2016). Why students become more engaged or more disengaged during the semester: A self-determination theory dual-process model. *Learning and Instruction, 43*, 27–38. https://doi.org/10.1016/j.learninstruc.2016.01.002

Jang, H., Reeve, J., & Deci, E. L. (2016). Engaging students in learning activities: It is not autonomy support or structure but autonomy support and structure. *Journal of Educational Psychology, 108*(3), 332–344. https://doi.org/10.1037/a0019682

Jang, H., Reeve, J., & Halusic, M. (2016). A new autonomy-supportive way of teaching that increases conceptual learning: Teaching in students' preferred ways. *The Journal of Experimental Education,84*(4), 686–709. https://doi.org/10.1080/00220973.2015.1083522

Jennings, P. A., Brown, J. L., Lanza, S. T., Miller, P., Dietz, S., Nauert, R., Dreisbach, M., Greenberg, M. T., & DeWeese, A. (2017). Impacts of the CARE for teachers' program on teachers' social and emotional competence and classroom interactions. *Journal of Educational Psychology*, *109*(7), 1010–1028. https://doi.org/10.1037/edu0000187

Jennings, P. A., & Greenberg, M. T. (2009). The prosocial classroom: Teacher social and emotional competence in relation to student and classroom outcomes. *Review of Educational Research, 79*(1), 491–525. https://doi.org/10.3102/00346543083256693

Jeynes, W. H. (2007). The relationship between parental involvement and urban secondary school student academic achievement: A meta-analysis. *Urban Education, 42*(1), 82–110. https://doi.org/10.1177/0042085906293818

Jeynes, W. H. (2012). A meta-analysis of the efficacy of different types of parental involvement programs for urban students. *Urban Education*, *47*(4), 706–742. https://doi.org/10.1177/0042085912445643

Johnson, R. B., & Christensen, L. (2019). *Educational research: Quantitative, qualitative, and mixed approaches* (6th ed.). SAGE.

Joshi, A., Ferris, J. C., Otto, A. L., & Regan, P. C. (2003). Parenting styles and academic achievement in college students. *Psychological Reports*, *93*(3 Pt. 1), 823–828. https://doi.org/10.2466/pr0.2003.93.3.823

Kaani, B., Musonda, F. M. C., & Mwiinga, T. M. (2024). Exploring the link between parenting styles and academic performance among grade 12 learners in Lusaka, Zambia. *International Journal of Research and Innovation in Social Science*, *8*(4), 1930–1939. https://doi.org/10.47772/IJRISS.2024.803173

Kassaw, C., Demareva, V., Negash, M., & Sime, Y. (2024). Psychosocial determinants of academic achievement in Ethiopian higher education students: Systematic review and meta-analysis. *Heliyon*, *10*(17), e36465. https://doi.org/10.1016/j.heliyon.2024.e36465

Keller, K. R. I. (2006). Investment in primary, secondary, and higher education and the effects on economic growth. *Contemporary Economic Policy*, *24*(1), 18–34. https://doi.org/10.1093/cep/byj012

Klem, A. M., & Connell, J. P. (2004). Relationships matter: Linking teacher support to student engagement and achievement. *Journal of School Health*, *74*(7), 262–273. https://doi.org/10.1111/j.1746-1561.2004.tb08283.x

Kline, R. B. (2005). *Principles and practice of structural equation modeling* (2nd ed.). Guilford Press.

Kline, R. B. (2016). *Principles and practice of structural equation modeling* (4th ed.). Guilford Press.

Kuncel, N. R., Credé, M., & Thomas, L. L. (2005). The validity of self-reported grade point averages, class ranks, and test scores: A meta-analysis and review of the literature. *Review of Educational Research, 75*(1), 63–82. https://doi.org/10.3102/00346543075001063

Kutsyuruba, S., Klinger, D. A., & Hussain, A. (2015). Relationships among school climate, school safety, and student achievement and well-being: A review of the literature. *Review of Education*, *3*(2), 103–135. https://doi.org/10.1002/rev3.3043

Lansford, J. E., Godwin, J., Al-Hassan, S. M., Bacchini, D., Bornstein, M. H., Chang, L., Chen, B.-B., Deater-Deckard, K., Di Giunta, L., Dodge, K. A., Malone, P. S., Oburu, P., Pastorelli, C., Skinner, A. T., Sorbring, E., Steinberg, L., Tapanya, S., Alampay, L. P., Uribe Tirado, L. M., & Zelli, A. (2018). Longitudinal associations between parenting and youth adjustment in twelve cultural groups: Cultural normativeness of parenting as a moderator. *Developmental Psychology*, *54*(2), 362–377. https://doi.org/10.1037/dev0000416

Lansford, J. E., Malone, P. S., Dodge, K. A., Chang, L., Chaudhary, N., Tapanya, S., Oburu, P., & Deater-Deckard, K. (2010). Children's perceptions of maternal hostility as a mediator of the link between discipline and children's adjustment in four countries. *International Journal of Behavioral Development*, *34*(5), 452–461. https://doi.org/10.1177/0165025409354933

Lauermann, F., & Karabenick, S. A. (2013). The meaning and measure of teachers' sense of responsibility for educational outcomes. *Teaching and Teacher Education*, *30*, 13–26. https://doi.org/10.1016/j.tate.2012.10.001

Leedy, P. D., & Ormrod, J. E. (2015). *Practical research: Planning and design* (11th ed.). Pearson.

Li, J., Ye, H., Tang, Y., Zhou, Z., & Hu, X. (2018). What are the effects of self-regulation phases and strategies for Chinese students? A meta-analysis of two decades research of the

association between self-regulation and academic achievement. *Frontiers in Psychology*, *9*, Article 2434. https://doi.org/10.3389/fpsyg.2018.02434

Liu, L., Hu, X., Xie, H., Hu, C., Zhou, D., Zhang, J., & Kong, Y. (2024). The influence of parenting styles and coping strategies on anxiety symptoms in adolescents: A comparative study of groups with and without non-suicidal self-injury behavior. *PeerJ, 12*, e18378. https://doi.org/10.7717/peerj.18378

Liu, M., & Wronski, L. (2018). Examining completion rates in web surveys via over 25,000 real-world surveys. *Social Science Computer Review*, *36*(1), 116–124. https://doi.org/10.1177/0894439317695581

Liu, Y., Hau, K. T., Liu, H., Wu, J., Wang, X., & Zheng, X. (2019). Multiplicative effect of intrinsic and extrinsic motivation on academic performance: A longitudinal study of Chinese students. *Journal of Personality*, *88*(3), 584–595. https://doi.org/10.1111/jopy.12512

Maccoby, E. E., & Martin, J. A. (1983). Socialization in the context of the family: Parent–child interaction. In P. H. Mussen (Ed.) & E. M. Hetherington (Vol. Ed.), *Handbook of child psychology: Vol. 4. Socialization, personality, and social development* (4th ed., pp. 1–101). Wiley.

MacKinnon, D. P. (2008). *Introduction to statistical mediation analysis*. Routledge. https://doi.org/10.4324/9780203809556

Magwa, L., & Mohangi, K. (2022). Using theoretical frameworks to analyze democratic student–teacher engagement and autonomous learning for academic achievement in Zimbabwe. *Frontiers in Education 7*, Article 925478. Frontiers Media SA. https://doi.org/10.3389/feduc.2022.925478

Mahoney, J. L., Durlak, J. A., & Weissberg, R. P. (2018). An update on social and emotional learning outcome research. *Phi Delta Kappan*, *100*(4), 18–23. https://doi.org/10.1177/0031721718815668

Maneesriwongul, W., & Dixon, J. K. (2004). Instrument translation process: A methods review. *Journal of Advanced Nursing*, *48*(2), 175–186. https://doi.org/10.1111/j.1365-2648.2004.03185.x

Martin, A. J., & Dowson, M. (2009). Interpersonal relationships, motivation, engagement, and achievement: Yields for theory, current issues, and educational practice. *Review of Educational Research*, *79*(1), 327–365. https://doi.org/10.3102/0034654308325583

Matejevic, M., Jovanovic, D., & Jovanovic, M. (2014). Parenting style, involvement of parents in school activities and adolescents' academic achievement. *Procedia - Social and Behavioral Sciences*, *128*, 288–293. https://doi.org/10.1016/j.sbspro.2014.03.158

Mekonnen, M. A. (2017). Effects of family educational background, dwelling and parenting style on students' academic achievement: The case of secondary schools in Bahir Dar. *Educational Research and Reviews*, *12*(18), 939–949. https://doi.org/10.5897/ERR2017.3276

Mergler, A. G., Spencer, F. H., & Patton, W. (2008). Personal responsibility: The creation, implementation and evaluation of a school-based program. *Journal of Student Wellbeing*, *2*(1), 35–51.

Meyers, L. S., Gamst, G., & Guarino, A. J. (2006). *Applied multivariate research: Design and interpretation*. SAGE.

Mihret, A. M., Dilgasa, G. S., & Mammo, T. H. (2019). Parenting style as correlates of adolescents' academic achievement motivation of Bate Secondary School, Haramaya, Ethiopia. *International Journal of Education and Literacy Studies*, *7*(2), 172–176. https://doi.org/10.7575/aiac.ijels.v.7n.2p.172

Mills, G. E. (2004). *Action research: A guide for the teacher researcher* (2nd ed.). Prentice Hall.

Moges, A., & Muola, J. M. (2014). Academic self-concept and academic achievement among secondary school students in Ethiopia. *Educational Research and Reviews, 9*(6), 107–112. https://doi.org/10.5897/ERR2013.1690

Ministry of Education. (2020). *Education statistics annual abstract 2019/20 (or 2020/21).* Federal Democratic Republic of Ethiopia, Ministry of Education. https://moe.gov.et/

Ministry of Education. (2020). *General education curriculum framework for Ethiopian education (KG – Grade 12).* Federal Democratic Republic of Ethiopia, Ministry of Education. https://moe.gov.et/.

Muasya, J. N., & Mulwa, P. K. (2023). Pilot study, a neglected part of qualitative and quantitative research process: Evidence from selected PhD theses and dissertations. *Humanities and Educational Research*, *4*(3), 383–402. https://doi.org/10.11648/j.her.20230804.11

Muthoni, K. L. (2013). *Relationship between family background and academic performance of secondary schools' students: A case of Siakago Division, Mbeere North District, Kenya (Master's research project report, University of Nairobi)*. University of Nairobi Digital Repository. http://erepository.uonbi.ac.ke/handle/11295/59451

Narad, A., & Abdullah, N. (2016). Academic performance of senior secondary school students: Influence of parental encouragement and school environment. *Rupkatha Journal on Interdisciplinary Studies in Humanities, 8*(2). https://rupkatha.com/V8/n2/02_Academic_Performance.pdf

Nauzeer, S., & Jaunky, V. C. (2019). Motivation and academic performance: A SEM approach. *International Journal of Environmental & Science Education, 14*(1), 41–60. http://www.ijese.net/makale/2102.html

Niehaus, K., Rudasill, K. M., & Adelson, J. L. (2012). Self-efficacy, intrinsic motivation, and academic outcomes among Latino middle school students participating in an after-school program. *Hispanic Journal of Behavioral Sciences, 34*(1), 118–136. https://doi.org/10.1177/0739986311424275

Obikeze, N., & Ezeanowai, J. O. (2025). Teacher–student relationship as predictors of students' academic achievement in public secondary schools in Anambra State. *International Journal of Innovative Education Research, 13*(3), 133–142. https://doi.org/10.5281/zenodo.16648172

Okwuduba, E. N., Nwosu, K. C., Okigbo, E. C., Samuel, N. N., & Achugbu, C. (2021). Impact of intrapersonal and interpersonal emotional intelligence and self-directed learning on academic performance among pre-university science students. *Heliyon, 7*(3), Article e06611. https://doi.org/10.1016/j.heliyon.2021.e06611

Opdenakker, M. C. (2022). Developments in early adolescents' self-regulation: The importance of teachers' supportive vs. undermining behavior. *Frontiers in Psychology*, 13, Article 1021904. https://doi.org/10.3389/fpsyg.2022.1021904

Orsini, C., Binnie, V., Evans, P., Ledezma, P., Fuentes, F., & Villegas, M. J. (2015). Psychometric validation of the Academic Motivation Scale in a dental student sample. *Journal of Dental Education, 79*(8), 971–981. https://doi.org/10.1002/j.0022-0337.2015.79.8.tb05978.x

Ozcan, Z. C. (2021). Factors affecting students' academic achievement according to the teachers' opinion. *Education Quarterly Reviews, 4*(2), 190–200. https://doi.org/10.31014/aior.1993.04.02.226

Patall, E. A., Cooper, H., & Robinson, J. C. (2008). Parent involvement in homework: A research synthesis. *Review of Educational Research, 78*(4), 1039–1101. https://doi.org/10.3102/0034654308325185

Patterson, G. R., & Capaldi, D. M. (1990). A comparison of models for boys' depressed mood. In J. E. Rolf, A. S. Masten, D. Cicchetti, K. H. Nuechterlein, & S. Weintraub (Eds.), *Risk and protective factors in the development of psychopathology* (pp. 410–430). Cambridge University Press.

Pekrun, R., Goetz, T., Titz, W., & Perry, R. P. (2002). Academic emotions in students' self-regulated learning and achievement: A program of qualitative and quantitative research. *Educational Psychologist*,*37*(2), 91–105. https://doi.org/10.1207/S15326985EP3702_4

Phillips, D. C., & Burbules, N. C. (2000). *Postpositivism and Educational Research*. Rowman & Littlefield.

Pianta, R. C., Hamre, B. K., & Allen, J. P. (2012). Teacher-student relationships and engagement: Conceptualizing, measuring, and improving the capacity of classroom interactions. In S. L. Christenson, A. L. Reschly, & C. Wylie (Eds.), *Handbook of research on student engagement* (pp. 365–386). Springer. https://doi.org/10.1007/978-1-4614-2018-7_17

Pinquart, M. (2016). Associations of parenting styles and dimensions with academic achievement in children and adolescents: A meta-analysis. *Educational Psychology Review*, *28*(3), 475–493. https://doi.org/10.1007/s10648-015-9338-y

Pinquart, M. (2017). Associations of parenting dimensions and styles with externalizing problems of children and adolescents: An updated meta-analysis. *Developmental Psychology*, *53*(5), 873–932. https://doi.org/10.1037/dev0000295

Pinquart, M., & Ebeling, M. (2020). Parental educational expectations and academic achievement in children and adolescents: A meta-analysis. *Educational Psychology Review*, *32*(2), 463–480. https://doi.org/10.1007/s10648-019-09506-z

Pinquart, M., & Kauser, R. (2018). Do the associations of parenting styles with behavior problems and academic achievement vary by culture? Results from a meta-analysis. *Cultural Diversity and Ethnic Minority Psychology*, *24*(1), 75–100. https://doi.org/10.1037/cdp0000149

Pintrich, P. R. (2004). A conceptual framework for assessing motivation and self-regulated learning in college students. *Educational Psychology Review*, *16*(4), 385–407. https://doi.org/10.1007/s10648-004-0006-x

Pintrich, P. R., & De Groot, E. V. (1990). Motivational and self-regulated learning components of classroom academic performance. *Journal of Educational Psychology*, *82*(1), 33–40. https://doi.org/10.1037/0022-0663.82.1.33

Policy Studies Institute. (2025). *Evaluation of the recent dynamics on national school leaving examination results in Ethiopia*. https://psi.org.et/index.php/blog/524-evaluation-of-the-recent-dynamics-on-national-school-leaving-examination-result-in-ethiopia-2

Polydoros, G., Antoniou, A. S., & Drigas, A. (2025). Student–teacher relationship and mathematics achievement: Comparative insights from students with and without diverse learning needs. *Psychology International*, *7*(3), 77. https://doi.org/10.3390/psycholint7030077

Qu, Y., & Pomerantz, E. M. (2015). Parents' involvement in children's learning in the United States and China: Implications for children's academic and emotional adjustment. *Child Development*, *86*(2), 610–625. https://doi.org/10.1111/cdev.12313

Rahimpour, P., Direkvand-Moghadam, A., & Hashemian, A. (2015). Relationship between the parenting styles and students' educational performance among Iranian girl high school students: A cross-sectional study. *Journal of Clinical and Diagnostic Research*, *9*(12), JC05–JC07. https://doi.org/10.7860/JCDR/2015/15981.6914

Rain, J. S. (2014). Final report: *Conscious Discipline research study*. Loving Guidance, LLC

Rao, M., & Wang, H. (2023). The relationship between parenting styles and adolescents' academic achievement. *Journal of Education, Humanities and Social Sciences*, *22*, 753–757. https://doi.org/10.54097/ehss.v22i.13355

Reeve, J. (2012). A self-determination theory perspective on student engagement. In S. L. Christenson, A. L. Reschly, & C. Wylie (Eds.), *Handbook of research on student engagement* (pp. 149–172). Springer. https://doi.org/10.1007/978-1-4614-2018-7_7

Reeve, J., & Cheon, S. H. (2021). Autonomy-supportive teaching: Its malleability, benefits, and potential to improve educational practice. *Educational Psychologist*, *56*(1), 54–77. https://doi.org/10.1080/00461520.2020.1862657

Ren, F., Zhang, Q., & Wei, X. (2021). Work autonomous and controlled motivation on Chinese employees' work performance and innovative work behaviour: The moderating role of financial stress. *Frontiers in Psychology*, *12*, Article 676063. https://doi.org/10.3389/fpsyg.2021.676063

Richardson, M., Abraham, C., & Bond, R. (2012). Psychological correlates of university students' academic performance: A systematic review and meta-analysis. *Psychological Bulletin*, *138*(2), 353–387. https://doi.org/10.1037/a0026838

Ringness, T. A., & Gander, M. J. (1974). Methods of child-rearing in rural Ethiopia and a comparison with methods in American lower socioeconomic families. *The Ethiopian Journal of Education*, *7*(1), 55–64.

Rohner, R. P. (2004). The parental "acceptance-rejection syndrome": Universal correlates of perceived rejection. *American Psychologist, 59*(8), 830–840. https://doi.org/10.1037/0003-066X.59.8.830

Rohner, R. P., & Khaleque, A. (2010). Testing central postulates of parental acceptance-rejection theory (PARTheory): A meta-analysis of cross-cultural studies. *Journal of Family Theory & Review, 2*(1), 73–87. https://doi.org/10.1111/j.1756-2589.2010.00040.x

Rohner, R. P., & Pettengill, S. M. (1985). Perceived parental acceptance-rejection and parental control among Korean adolescents. *Child Development, 56*(2), 524–528. https://doi.org/10.2307/1129739

Rono, H. K. (2013). Relationship between school effectiveness and academic performance of students in secondary schools of Central Kenya. *Educational Research International, 2*(2), 173–184. http://erint.savap.org.pk/PDF/Vol.2(2)/ERInt.2013(2.2-21).pdf

Roorda, D. L., Jak, S., Zee, M., Oort, F. J., & Koomen, H. M. (2017). Affective teacher–student relationships and students' engagement and achievement: A meta-analytic update and test of the mediating role of engagement. *School Psychology Review, 46*(3), 239–261. https://doi.org/10.17105/SPR-2017-0035.V46-3

Roorda, D. L., Koomen, H. M., Spilt, J. L., & Oort, F. J. (2011). The influence of affective teacher–student relationships on students' school engagement and achievement: A meta-analytic approach. *Review of Educational Research, 81*(4), 493–529. https://doi.org/10.3102/0034654311421793

Ryan, R. M., & Deci, E. L. (2018). *Self-determination theory: Basic psychological needs in motivation, development, and wellness*. Guilford Press. https://doi.org/10.1521/978.14625/28806

Ryan, R. M., & Deci, E. L. (2000). Intrinsic and extrinsic motivations: Classic definitions and new directions. *Contemporary Educational Psychology, 25*(1), 54–67. https://doi.org/10.1006/ceps.1999.1020

Ryan, R. M., & Deci, E. L. (2000). Self-determination theory and the facilitation of intrinsic motivation, social development, and well-being. *American Psychologist, 55*(1), 68–78. https://doi.org/10.1037/0003-066X.55.1.68

Ryan, R. M., & Deci, E. L. (2020). Intrinsic and extrinsic motivation from a self-determination theory perspective: Definitions, theory, practices, and mechanisms. *Contemporary Educational Psychology, 61*, Article 101860. https://doi.org/10.1016/j.cedpsych.2020.101860

Salmela-Aro, K., & Upadyaya, K. (2014). School burnout and engagement in the context of demands–resources model. *British Journal of Educational Psychology, 84*(1), 137–151. https://doi.org/10.1111/bjep.12018

Santrock, J. W. (2007). *Adolescence* (10th ed.). McGraw Hill.

Savina, E., Fulton, C., & Beaton, C. (2025). Teacher emotional competence: A conceptual model. *Educational Psychology Review, 37*(2), 1–34. https://doi.org/10.1007/s10648-025-10018-2

Schonert-Reichl, K. A. (2017). Social and emotional learning and teachers. *The Future of Children, 27*(1), 137–155. https://doi.org/10.1353/foc.2017.0007

Schunk, D. H., Meece, J. L., & Pintrich, P. R. (2014). *Motivation in education: Theory, research, and applications* (4th ed.). Pearson.

Sengul, O., Zhang, X., & Leroux, A. J. (2019). A multi-level analysis of students' teacher and family relationships on academic achievement in schools. *International Journal of Educational Methodology, 5*(1), 117–133. https://doi.org/10.12973/ijem.5.1.131

Serbessa, D. D. (2006). Tension between traditional and modern teaching-learning approaches in Ethiopian primary schools. *Journal of International Cooperation in Education, 9*(1), 123–140.

Setia, M. S. (2016). Methodology series module 3: Cross-sectional studies. *Indian Journal of Dermatology*, *61*(3), 261–264. https://doi.org/10.4103/0019-5154.182410

Sha, L., Schunn, C. D., Bathgate, M., & Ben-Eliyahu, A. (2016). Families support their children's success in science learning. *Journal of Research in Science Teaching, 53*(3), 376–404. https://doi.org/10.1002/tea.21251

Shanka, E. B., & Thuo, M. (2017). Conflict management and resolution strategies between teachers and school leaders in primary schools of Wolaita Zone, Ethiopia. *Journal of Education and Practice*, *8*(4), 63–74.

Shengyao, Y., Alimoradi, Z., Sudirman, I. D., Pakpour, A. H., Griffiths, M. D., & Lin, C.-Y. (2024). Academic resilience, self-efficacy, and motivation: The role of parenting style. *Scientific Reports*, *14*(1), 5571. https://doi.org/10.1038/s41598-024-55530-7

Shin, H., & Ryan, A. M. (2014). Early adolescent friendships and academic adjustment: Examining selection and influence processes with longitudinal social network analysis. *Developmental Psychology*. Advance online publication. https://doi.org/10.1037/a0037922

Simonsen, B., Fairbanks, S., Briesch, A., Myers, D., & Sugai, G. (2008). Evidence-based practices in classroom management: Considerations for research to practice. *Education and Treatment of Children*, *31*(3), 351–380.

Smetana, J. G. (2017). Current research on parenting styles, dimensions, and beliefs. *Current Opinion in Psychology*, *15*, 19–25. https://doi.org/10.1016/j.copsyc.2017.02.012

Soenens, B., & Vansteenkiste, M. (2010). A theoretical upgrade of the concept of parental psychological control: Proposing new insights on the basis of self-determination theory. *Developmental Review*, *30*(1), 74–99. https://doi.org/10.1016/j.dr.2009.11.001

Sousa, V. D., & Rojjanasrirat, W. (2011). Translation, adaptation and validation of instruments or scales for use in cross-cultural health care research: A clear and user-friendly guideline. *Journal of Evaluation in Clinical Practice*, *17*(2), 268–274. https://doi.org/10.1111/j.1365-2753.2010.01434.x

Spera, C. (2005). A review of the relationship among parenting practices, parenting styles, and adolescent school achievement. *Educational Psychology Review*, *17*(2), 125–146. https://doi.org/10.1007/s10648-005-3950-1

Spinelli, M., Preti, E., Kassa, T. T., Asale, M. A., Goshu, M. A., Tsega, T. W., Gezie, A. M., Fasolo, M., & Mesman, J. (2023). Cultural considerations in the assessment of sensitivity in low-income caregivers in Ethiopia. *Frontiers in Psychology*, *14*, Article 1163773. https://doi.org/10.3389/fpsyg.2023.1163773

Steinmayr, R., Meißner, A., Weidinger, A. F., & Wirthwein, L. (2014). Academic achievement. In *Oxford Bibliographies in Education*. Oxford University Press. https://doi.org/10.1093/obo/9780199756810-0108

Steinmayr, R., Weidinger, A. F., Schwinger, M., & Spinath, B. (2019). The importance of students' motivation for their academic achievement –

replicating and extending previous findings. *Frontiers in Psychology*, *10*. https://doi.org/10.3389/fpsyg.2019.01730

Stronge, J. H. (2018). *Qualities of effective teachers* (3rd ed.). ASCD.

Tabachnick, B. G., & Fidell, L. S. (2007). *Using multivariate statistics* (5th ed.). Allyn & Bacon/Pearson Education.

Tabachnick, B. G., & Fidell, L. S. (2013). *Using multivariate statistics* (6th ed.). Pearson.

Tadesse, A. (2015). *Parenting style in the Amhara region: Development and validation of a parenting style scale and investigation of adolescents' self-esteem, identity style, and psychological well-being* [Doctoral dissertation, Addis Ababa University]. http://etd.aau.edu.et/handle/12345678/10955

Tadesse, M., Yeshaneh, A., & Mulu, G. B. (2022). Determinants of good academic performance among university students in Ethiopia. *BMC Medical Education*, *22*(1), 395. https://doi.org/10.1186/s12909-022-03461-0

Tadesse, T., Asmamaw, A., Getachew, K., Ferede, B., Melese, W., Siebeck, M., & Fischer, M. R. (2022). Self-regulated learning strategies as predictors of perceived learning gains among undergraduate students in Ethiopian universities. Education Sciences, 12(7), Article 468. https://doi.org/10.3390/educsci12070468

Tadesse, T., & Gillies, R. M. (2015). Nurturing cooperative learning pedagogies in higher education classrooms: Evidence of instructional reform and potential challenges. *Current Issues in Education*, *18*(2).

Tadesse, T., & Melese, W. (2016). The prevailing practices and challenges of curriculum reform in Ethiopian higher education: Views and responses from within. *Australian Journal of Teacher Education, 41*(10), 87–106.

Taylor, G., Jungert, T., Mageau, G. A., Schattke, K., Dedic, H., Rosenfield, S., & Koestner, R. (2014). A self-determination theory approach to predicting school achievement over time: The unique role of intrinsic motivation. *Contemporary Educational Psychology, 39*(4), 342–358. https://doi.org/10.1016/j.cedpsych.2014.08.002

Terefe, A., Hailu, A., & Molla, M. (2025). Academic engagement and autonomous motivation: A study in South Ethiopia secondary schools. *Cogent Education, 12*, 1–16. https://doi.org/10.1080/2331186X.2025.2564256

Teuber, Z., Tang, X., Sielemann, L., Otterpohl, N., & Wild, E. (2022). Autonomy-related parenting profiles and their effects on adolescents' academic and psychological development: A longitudinal person-oriented analysis. *Journal of Youth and Adolescence, 51*(7), 1333-1353. https://doi.org/10.1007/s10964-021-01538-5

UNICEF Ethiopia. (2022). *UNICEF Ethiopia annual report 2022*. https://www.unicef.org/ethiopia/reports/annual-report-2022

United Nations Educational, Scientific and Cultural Organization Institute for Lifelong Learning. (2017). *Learning together across generations: Guidelines for family literacy and learning programmes*. UNESCO Institute for Lifelong Learning

United Nations Educational, Scientific and Cultural Organization for Africa International Institute for Capacity Building in Africa. (2025). *Reconceptualizing the 'learning crisis' in Africa: Putting children, communities, and languages at the center*. https://www.iicba.unesco.org/en/node/850

United Nations International Children's Emergency Fund Ethiopia. (2025). *Foundational learning action tracker: Results for Africa*.https://www.unicef.org/media/175271/file/Foundational-learning-action-tracker-2025-Africa-snapshot-EN.pdf

Usher, E. L., & Pajares, F. (2008). Sources of self-efficacy in school: Critical review of the literature and future directions. *Review of Educational Research, 78*(4), 751–796. https://doi.org/10.3102/0034654308321456

Vallerand, R. J., Pelletier, L. G., Blais, M. R., Briere, N. M., Senecal, C., & Vallieres, E. F. (1992). The Academic Motivation Scale: A measure of intrinsic, extrinsic, and amotivation in education. *Educational and Psychological Measurement, 52*(4), 1003–1017. https://doi.org/10.1177/0013164492052004025

Vallerand, R. J., Pelletier, L. G., Blais, M. R., Briere, N. M., Senecal, C., & Vallieres, E. F. (1993). On the assessment of intrinsic, extrinsic, and amotivation in education: Evidence on the concurrent and construct validity of the Academic Motivation Scale. *Educational and Psychological Measurement, 53*(1), 159–172. https://doi.org/10.1177/0013164493053001018

Van Leeuwen, K. G., & Vermulst, A. A. (2004). Some psychometric properties of the Ghent Parental Behavior Scale. *European Journal of Psychological Assessment, 20*(4), 283–298. https://doi.org/10.1027/1015-5759.20.4.283

Vansteenkiste, M., Simons, J., Lens, W., Sheldon, K. M., & Deci, E. L. (2004). Motivating learning, performance, and persistence: The synergistic effects of intrinsic goal contents and autonomy-supportive contexts. Journal of Personality and Social Psychology, 87(2), 246–260. https://doi.org/10.1037/0022-3514.87.2.246

Van Teijlingen, E., & Hundley, V. (2002). The importance of pilot studies. *Nursing Standard*, *16*(40), 33–36. https://doi.org/10.7748/ns2002.06.16.40.33.c3214

Vasquez, A. C., Patall, E. A., Fong, C. J., Corrigan, A. S., & Pine, L. (2016). Parent autonomy support, academic achievement, and psychosocial functioning: A meta-analysis of research. *Educational Psychology Review*, *28*(3), 605–644. https://doi.org/10.1007/s10648-015-9329-z

Vu, T. V., Chudzicki, C., Beier, M. E., Picciano, A. G., & Magis-Weinberg, L. (2024). The reciprocity between various motivation constructs and academic achievement: A systematic review and multilevel meta-analysis of longitudinal studies. *Educational Psychology*, *44*(3), 264–289. https://doi.org/10.1080/01443410.2024.2307960

Vu, T. V., Magis-Weinberg, L., Jansen, B. R. J., van Atteveldt, N., Janssen, T. W. P., Lee, N. C., van der Maas, H. L. J., & Meeter, M. (2022). Motivation-achievement cycles in learning: A literature review and research agenda. *Educational Psychology Review*, *34*(1), 39–71. https://doi.org/10.1007/s10648-021-09616-7

Walker, A., Aguiar, N. R., Soicher, R. N., Kuo, Y.-C., & Resig, J. (2024). Exploring the relationships between motivation and academic performance among online and blended learners: A meta-analytic review. *Online Learning*, *28*(4), 76–116. https://doi.org/10.24059/olj.v28i4.4602

Walker, J. M. T., Wilkins, A. S., Dallaire, J. R., Sandler, H. M., & Hoover-Dempsey, K. V. (2005). Parental involvement: Model revision through scale development. *The Elementary School Journal*, *106*(2), 85–104. https://doi.org/10.1086/499193

Wang, C., Hatzigianni, M., Shahaeian, A., Murray, E., & Harrison, L. J. (2016). The combined effects of teacher-child and peer relationships on children's social-emotional adjustment. *Journal of School Psychology*, *59*, 1–11.

Wang, M. T., & Eccles, J. S. (2012). Adolescent behavioral, emotional, and cognitive engagement trajectories in school and their differential relations to educational success. *Journal of Research on Adolescence*, *22*(1), 31–39. https://doi.org/10.1111/j.1532-7795.2011.00753.x

Wang, M. T., & Sheikh-Khalil, S. (2014). Does parental involvement matter for student achievement and mental health in high school? *Child Development*, *85*(2), 610–625. https://doi.org/10.1111/cdev.12153

Wentzel, K. R. (2012). Teacher-student relationships and adolescent competence at school. *In Interpersonal relationships in education*: *An overview of contemporary research* (pp. 19-35). Rotterdam: Sense Publishers.

Wentzel, K. R. (2017). Peer relationships, motivation, and academic performance at school. In A. J. Elliot, C. S. Dweck, & D. S. Yeager (Eds.), *Handbook of competence and motivation: Theory and application* (2nd ed., pp. 586–603). Guilford Press.

Wigfield, A., & Eccles, J. S. (2000). Expectancy–value theory of achievement motivation. *Contemporary Educational Psychology*, *25*(1), 68–81. https://doi.org/10.1006/ceps.1999.1015

Wigfield, A., Eccles, J. S., Schiefele, U., Roeser, R. W., & Davis-Kean, P. (2015). Development of achievement motivation and engagement. In M. E. Lamb & R. M. Lerner (Eds.), *Handbook of child psychology and developmental science: Vol. 3. Socioemotional processes* (7th ed., pp. 657–700). John Wiley & Sons. https://doi.org/10.1002/9781118963418.childpsy316

Wild, D., Grove, A., Martin, M., Eremenco, S., McElroy, S., Verjee-Lorenz, A., & Erikson, P. (2005). Principles of good practice for the translation and cultural adaptation process for patient-reported outcomes (PRO) measures: Report of the ISPOR Task Force for Translation and Cultural Adaptation. *Value in Health*, *8*(2), 94–104. https://doi.org/10.1111/j.1524-4733.2005.04054.x

Wilder, S. (2014). Effects of parental involvement on academic achievement: A meta-synthesis. *Educational Review, 66*(3), 377–397. https://doi.org/10.1080/00131911.2013.780009

Wolf, E. J., Harrington, K. M., Clark, S. L., & Miller, M. W. (2013). Sample size requirements for structural equation models: An evaluation of power, bias, and solution propriety. *Educational and Psychological Measurement, 73*(6), 913–934. https://doi.org/10.1177/0013164413495237

World Bank. (2005). *Expanding opportunities and building competencies for young people: A new agenda for secondary education*. World Bank. https://doi.org/10.1596/0-8213-6170-8

World Bank. (2021). *Ethiopia – Education sector analysis or related secondary education / completion-rate indicators* (various World Bank education reports and World Development Indicators data for Ethiopia around 2021). https://www.worldbank.org/en/country/ethiopia

Woreta, G. T. (2024). Predictors of academic engagement of high school students: Academic socialization and motivational beliefs. *Frontiers in Psychology*, *15*, Article 1347163. https://doi.org/10.3389/fpsyg.2024.1347163

Yamamoto, Y., & Holloway, S. D. (2010). Parental expectations and children's academic performance in sociocultural context. *Educational Psychology Review*, *22*(3), 189–214. https://doi.org/10.1007/s10648-010-9121-z

Yang, J., & Zhao, X. (2020). Parenting styles and children's academic performance: Evidence from middle schools in China. *Children and Youth Services Review, 113*, 105017. https://doi.org/10.1016/j.childyouth.2020.105017

Yarin, A. J., Encalada, I. A., Elias, J. W., Surichaqui, A. A., Sulca, R. E., & Pozo, F. (2022). Relationship between motivation and academic performance in Peruvian undergraduate students in the subject mathematics. *Education Research International*, *2022*, Article 3667076. https://doi.org/10.1155/2022/3667076

Yeager, D. S., Henderson, M. D., Paunesku, D., Walton, G. M., D'Mello, S., Spitzer, B. J., & Duckworth, A. L. (2014). Boring but important: A self-transcendent purpose for learning fosters academic self-regulation. *Journal of Personality and Social Psychology*, *107*(4), 559–580. https://doi.org/10.1037/a0037637

Yeshanew, Y. T. (2024). Cultural influences on child development in Ethiopia: *Perspectives from cultural experts*. *Authorea preprints*. https://doi.org/10.22541/au.170663703.32273472/v1

Yigzaw, A., & Fentie, A. (2013). The impact of students' self-regulated language learning on their reading achievement in Ethiopian high schools: Grade 9 in focus. *Journal of Media and Communication Studies, 5*(5), 44–51. https://doi.org/10.5897/JMCS2013.0345

Yılmaz Bodur, Z., & Aktan, S. (2021). Research on the relationship between parental attitudes, students' academic motivation and personal responsibility. *International Journal on Social and Education Sciences (IJonSES), 3*(4), 636–655. https://doi.org/10.46328/ijonses.187

Yin, H., Lee, J. C. K., Zhang, Z., & Jin, Y. (2013). Exploring the relationship among teachers' emotional intelligence, emotional labor strategies and teaching satisfaction. *Teaching and Teacher Education, 35,* 137–145. https://doi.org/10.1016/j.tate.2013.06.006

Yosef, M. S. (2022). *The effect of parenting on the psychosocial development of children: The case of South West Academy* [Master's thesis, St. Mary's University]. http://repository.smuc.edu.et/bitstream/123456789/7741/1/Miriam%20updated%20research%20paper%20%20(3).pdf

Zewdie, T. M. (2024). Relationships between classroom management styles and Grade 8 English students' performance in Addis Ababa middle schools: A quantitative ANOVA study. *Journal of English Teaching & Applied Linguistics.*

Zimmerman, B. J. (2000). Attaining self-regulation: A social cognitive perspective. In M. Boekaerts, P. R. Pintrich, & M. Zeidner (Eds.), *Handbook of self-regulation* (pp. 13–39). Academic Press. https://doi.org/10.1016/B978-012109890-2/50031-7

Zimmerman, B. J. (2002). Becoming a self-regulated learner: An overview. *Theory Into Practice*, *41*(2), 64–70. https://doi.org/10.1207/s15430421tip4102_2

Zimmerman, B. J. (2015). Self-regulated learning: Theories, measures, and outcomes. In J. D. Wright (Ed.), *International encyclopedia of the social & behavioral sciences* (2nd ed., Vol. 21, pp. 541–546). Elsevier. https://doi.org/10.1016/B978-0-08-097086-8.26060-1

Zhang, Q., & Zhang, J. (2013). Instructors' positive emotions: Effects on student engagement and critical thinking in U.S. and Chinese classrooms. *Communication Education, 62*(4), 389–405. https://doi.org/10.1080/03634523.2013.828842

Zhang, Z. (2022). Toward the role of teacher empathy in students' engagement in English language classes. *Frontiers in Psychology, 13*, 880935. https://doi.org/10.3389/fpsyg.2022.880935

APPENDICES

Appendix A

(English Version of the Questionnaires)

Bahir Dar University

College of Education, School of Educational Sciences

Department of Psychology

Dear Students

My name is Mekedem Tamiru Jemberu. I am a PhD student at Bahir Dar University, College of Education, School of Educational Sciences, Department of Psychology, and I am conducting my dissertation for the partial fulfillment of a Doctorate in Educational Psychology. The study aims to examine the role of family-related factors, students' perceptions of teachers' conscious discipline, and students' intra-personal factors in promoting students' academic achievement among Debre Markos secondary school students.

The data for this study will be collected from 9th and 10th grade students at Debre Markos secondary schools. Your participation is entirely voluntary. Students who participate in this study will not face any harm related to their participation. The names of the respondents will not be mentioned; participation will be anonymous. Participants can withdraw from the study at any time. The responses students provide will be kept fully confidential. The questionnaire has two parts: the first part contains demographic information (**4 items**, and the second part contains **115 items** about family-related factors, students' intra-personal factors, and perceived teacher conscious discipline. Filling out the questionnaire will take a minimum of **60 minutes**, and the data will be collected from selected secondary schools.

The data collected through this questionnaire will be used only for educational purposes. If you have any concerns or questions regarding this study, you can contact the researcher via phone at +251912329150 or email at mekdan76@gmail.com. If you have read the consent form and agree to participate in this study, please sign below.

Signature: _____ Date: _____

Thank you in advance for your participation!

Part I: Demographic information

Instruction: Please write your answer for the following questions in the provided space.

1. Sex: (1 = Male and 2 = Female) _____
2. Grade Level: (1 = Grade 9th and 2 = Grade 10th) _____
3. Age: _____
4. Write down your average first-semester academic achievement score _____

Part II: Questionnaires

Questionnaire 1: Parenting Style Questionnaire

Instruction 1: The following statements describe parenting style. Please read each statement carefully and indicate the extent to which you agree or disagree by circling the appropriate number: circle **"1"** for **"Strongly Disagree," "2"** for **"Disagree," "3"** for **"Difficult to decide," "4"** for **"Agree,"** and **"5"** for **"Strongly Agree."**

No.	**Items**	**Scales**				
A. Autocrat						
1.	My parents/guardians don't want to see me free without a task.	1	2	3	4	5
2.	My parents don't allow me to ask any questions other than doing what they order.	1	2	3	4	5

3.	My parents/guardians don't give me any freedom.	1	2	3	4	5
4.	When my parents/guardians order me to do something, they angrily tell me.	1	2	3	4	5
5.	My parents/guardians don't want to see me play with my friends.	1	2	3	4	5
B. Pampering						
6.	My parents/guardians worry about me more than themselves.	1	2	3	4	5
7.	My parents/guardians don't ask me why even if I do something wrong.	1	2	3	4	5
8.	Even though my parents/guardians know that I am guilty, they just shrug it off.	1	2	3	4	5
9.	My parents/guardians always take care of me like a baby.	1	2	3	4	5
10.	My parents/guardians don't want anyone to talk to me badly.	1	2	3	4	5
11.	My parents/guardians take great care of me.	1	2	3	4	5
C. Decent						
12.	My parents/guardians are the ones who choose my friends.	1	2	3	4	5
13.	My parents/guardians tell me what I should be in the future.	1	2	3	4	5
14.	My parents/guardians praise me when I do my parents' orders and punish me when I don’t.	1	2	3	4	5
15.	My parents/guardians tell me that I should also follow the following beliefs.	1	2	3	4	5
16.	My parents/guardians tell me that I should be a decent child.	1	2	3	4	5
17.	My parents/guardians enjoy hearing about my good deeds from other people.	1	2	3	4	5
18.	My parents/guardians encourage me to be like them by pointing out people they consider to be good role models in the area.	1	2	3	4	5
19.	My parents/guardians tell me that I shouldn't make a name for them because of my bad behavior.	1	2	3	4	5
D. Reasonable						
20.	My parents/guardians tell me to rationalize and provide a description of all my deeds.	1	2	3	4	5

21.	Instead of getting upset when I do something wrong, my parents/guardians understand the reason and advise me.	1	2	3	4	5
22.	My parents/guardians tell me that I have to do everything on schedule.	1	2	3	4	5
23.	My parents/guardians tell me that I should solve the problems I face by discussing them with them.	1	2	3	4	5
24.	When my parents/guardians want to do something for me, they first ask me my interests and preferences.	1	2	3	4	5
25.	My parents/guardians respect my rights.	1	2	3	4	5
26.	My parents/guardians take time to listen to my ideas.	1	2	3	4	5

Questionnaire 2: Parental Behavior Scale

Instruction 2: The following statements describe parental behavior. Please read each statement carefully and indicate the extent to which you agree or disagree by circling the appropriate number: circle **"1"** for **"Strongly Disagree," "2"** for **"Disagree," "3"** for **"Difficult to decide," "4"** for **"Agree,"** and **"5"** for **"Strongly Agree."**

No.	**Items**	**Scales**				
A. Positive Parenting						
1	My parents/guardians make time to listen to me when I want to tell them something.	1	2	3	4	5
2	My parents/guardians show interest in what I have to say.	1	2	3	4	5
3	My parents/guardians praise me when I behave well.	1	2	3	4	5
4	My parents/guardians let me know they are pleased with me.	1	2	3	4	5
5	My parents/guardians tell me I've done a good job.	1	2	3	4	5
6	My parents/guardians make sure I know they love me.	1	2	3	4	5
7	My parents/guardians encourage me to do my best.	1	2	3	4	5
8	My parents/guardians make sure I know I can always go to them for help or advice.	1	2	3	4	5
B. Discipline						

9	When I have been disobedient, my parents/guardians give me a chore as punishment.	1	2	3	4	5
10	When I have been disobedient, my parents/guardians make me stay in my room as punishment.	1	2	3	4	5
11	When I have been disobedient, my parent/guardian takes away a privilege (e.g., TV, computer) as punishment.	1	2	3	4	5
12	When I have been disobedient, my parents/guardians send me to bed early as punishment.	1	2	3	4	5
C. Harsh Punishment						
13	My parents/guardians spank me when I am disobedient or naughty.	1	2	3	4	5
14	My parents/guardians use a belt or paddle to spank me when I am disobedient or naughty.	1	2	3	4	5
D. Material Rewarding						
15	My parents/guardians give me money as a reward for good behavior.	1	2	3	4	5
16	My parents/guardians give me gifts like books as a reward for good behavior.	1	2	3	4	5
E. Rule Setting						
17	My parents/guardians teach me to be polite at school.	1	2	3	4	5
18	My parents/guardians teach me to keep the property of others.	1	2	3	4	5
19	My parents/guardians teach me to obey the rules at home.	1	2	3	4	5
20	My parents/guardians teach me to obey the rules at school.	1	2	3	4	5

Questionnaire 3: Academic Motivation Scale

Instruction 3: The following statements are about students' academic motivation. Please read each statement carefully and indicate the extent to which it applies to you by circling the appropriate number. Encircle one of the five alternatives that best describes your academic motivation.

The number represents: 1 = Does not correspond at all, 2 = Corresponds a little, 3 = Corresponds moderately, 4 = Corresponds a lot, and 5 = Corresponds exactly.

No.	Items	Scales				
Why do you attend your high school?						
1	Because I experience pleasure and satisfaction while learning new things.	1	2	3	4	5
2	For the pleasure I experience when I discover new things never seen before.	1	2	3	4	5
3	For the pleasure that I experience in broadening my knowledge in subjects which are useful to me.	1	2	3	4	5
4	Because my studies allow me to continue to learn about many things that interest me.	1	2	3	4	5
5	I enjoy outperforming myself in my studies because it gives me pleasure.	1	2	3	4	5
6	For the pleasure that I experience while I am surpassing myself in one of my personal accomplishments.	1	2	3	4	5
7	For the satisfaction I feel when I am in the process of accomplishing difficult academic activities.	1	2	3	4	5
8	Because my education allows me to experience personal satisfaction in my mission for excellence in my studies.	1	2	3	4	5
9	For the intense feelings I experience when I am communicating my own ideas to others.	1	2	3	4	5
10	For the pleasure that I experience when I read interesting authors.	1	2	3	4	5
11	For the pleasure that I experience when I feel completely absorbed by what certain authors have written.	1	2	3	4	5
12	For the "high" feeling that I experience while reading about various interesting subjects.	1	2	3	4	5
13	Because I think that a high school education will help me to join and better to prepare for future university studies.	1	2	3	4	5
14	To obtain a more prestigious job later on.	1	2	3	4	5
15	Because I want to have "the good life" later on.	1	2	3	4	5
16	To have a better salary later on.	1	2	3	4	5

17	Because I think that my education will help me better prepare for the career I have chosen.	1	2	3	4	5
18	Because eventually it will enable me to enter the job market in a field that I like.	1	2	3	4	5
19	Because this will help me make a better choice regarding my career orientation.	1	2	3	4	5
20	Because I believe that a few additional years of education will improve my competence as a worker.	1	2	3	4	5
21	To prove to myself that I am capable of completing my secondary school education.	1	2	3	4	5
22	Because when I succeed in my education, I feel important.	1	2	3	4	5
23	To demonstrate my intelligence to myself.	1	2	3	4	5
24	Because I want to show myself that I can succeed in my studies.	1	2	3	4	5
25	Honestly, I don't know; I really feel that I am wasting my time in education.	1	2	3	4	5
26	I used to have good reasons for going to school, but now I'm not sure.	1	2	3	4	5
27	I can't see why I go to school, and frankly, I couldn't care about it.	1	2	3	4	5
28	I don't know; I can't understand what I am doing in school.	1	2	3	4	5

Questionnaire 4: Students' Learning Responsibility Scale

Instruction 4: The following statements explain students' learning responsibility. Please read each statement carefully and indicate how true each statement is for you by circling the appropriate number.

The number represents: 1 = Never, 2 = Rarely, 3 = Sometimes, 4 = Often, and 5 = Always.

No.	**Items**	**Scales**				
A Learning Responsibility Outside Classroom /LROC						
1	I ask permission from my teacher to speak and ask questions.	1	2	3	4	5
2	I completely note the homework assigned by my teacher.	1	2	3	4	5
3	I raise my finger to ask for permission to speak.	1	2	3	4	5
4	I perform the behavior I should do in intragroup supportive activities.	1	2	3	4	5

5	I immediately write down the words that my teacher wants us to note.	1	2	3	4	5
6	I do my classwork on time.	1	2	3	4	5
7	I show willingness to participate in group work.	1	2	3	4	5
8	I eagerly take part in activities during the course.	1	2	3	4	5
9	I try to perform classroom practices as shown by my teacher.	1	2	3	4	5
10	I carefully listen to what my teacher and friends tell me.	1	2	3	4	5
11	I prepare pencils, books, etc., and tools before the teacher comes.	1	2	3	4	5
12	I try to do my classwork according to the explanations of my teacher.	1	2	3	4	5
13	I do not interrupt my teacher or my friends when they speak.	1	2	3	4	5
B. Learning Responsibility Outside Classroom/LROC						
14	I note information I find important in my notebook or book with explanations.	1	2	3	4	5
15	I form schemas and tables to make information clearer while I study.	1	2	3	4	5
16	I summarize the knowledge I learn.	1	2	3	4	5
17	I use tables, figures, and graphs while summarizing.					
18	I mark the points I find important in a text I read in a book.	1	2	3	4	5
19	I ask about the subjects and words I noted down, and I ask my teacher about them.	1	2	3	4	5
20	I study the subjects and words that I don’t know and noted during the course after the lesson	1	2	3	4	5
21	I read the subjects that will be taught the next day.	1	2	3	4	5
22	I follow and read the news and information announced in the classroom and school bulletin board.	1	2	3	4	5
23	I use tools such as a dictionary, map, atlas, etc. while I study at home.	1	2	3	4	5
24	I use the library and other written sources for assignments	1	2	3	4	5

Questionnaire 5: Student-perceived Teachers' Conscious Discipline Questionnaire

Instruction 5: The following statements are about students' perceptions of teachers' conscious discipline. Please read each statement carefully and indicate the extent to which it applies to you by circling the appropriate number. Encircle one of the five alternatives that best describes your academic motivation.

The number represents: 1 = Strongly Disagree, 2 = Disagree, 3 = Difficult to decide, 4 = Agree, and 5 = Strongly Agree**.**

No.	**Student-Perceived Teachers' Conscious Discipline Questionnaire**	**Scales**				
A. Empathy						
1	I believe my teacher is aware of the challenges students face in their learning process.	1	2	3	4	5
2	My teacher considers the diverse learning styles and abilities of students when planning lessons.	1	2	3	4	5
3	My teacher demonstrates empathy by adjusting teaching methods to meet the needs of individual students.	1	2	3	4	5
4	My teacher expresses empathy by acknowledging and validating the emotions of students.	1	2	3	4	5
B. Encouragement						
5	I feel encouraged by my teacher to overcome challenges and persevere in my studies.	1	2	3	4	5
6	My teacher provides positive feedback when students perform well in class.	1	2	3	4	5
7	I sense a supportive environment in which my teacher encourages collaboration among students.	1	2	3	4	5
8	My teacher promotes a sense of belonging and inclusion, making learning enjoyable.	1	2	3	4	5
C. Positve Intent						

9	My teacher communicates with a positive and encouraging tone during class.	1	2	3	4	5
10	My teacher provides support and encouragement when I face challenges in my studies.	1	2	3	4	5
11	I feel comfortable approaching my teacher with questions or concerns, knowing they will be supportive.	1	2	3	4	5
D. Composure						
12	My teacher remains calm and composed, even in challenging situations.	1	2	3	4	5
13	My teacher demonstrates patience when explaining concepts or addressing questions.	1	2	3	4	5
14	I perceive that my teacher tolerates differences of opinion and diverse perspectives.	1	2	3	4	5
15	My teacher adapts to changes in the learning environment without becoming flustered.	1	2	3	4	5
16	I see my teacher as a positive role model in maintaining composure and professionalism.	1	2	3	4	5
17	I observe that my teacher handles disruptions or unexpected events with a sense of control.	1	2	3	4	5

አባሪዎች

አባሪ ለ

የአማርኛ ትርጉም መጠይቅ

ባህር ዳር ዩኒቨርሲቲ

የትምህርት ኮሌጅ የትምህርት ሳይንስ ትምህርት ቤት

የስነ-ልቦና ትምህርት ክፍል

ውድ ተማሪዎች፡-

መቅድም ታምሩ ጀምበሩ እባላለሁ። በባህር ዳር ዩኒቨርሲቲ፣ በትምህርት ኮሌጅ፣ የትምህርት ሳይንስ ትምህርት ቤት፣ የስነ-ልቦና ትምህርት ክፍል የ 3ኛ ዲግሪ ተማሪ ነኝ። በትምህርት ሳይኮሎጅ የዶክትሬት ዲግሪ ሚሚያ የሚሆን የጥናትና ምርምር ሥራዬን እየሰራሁ ሲሆን የጥናቱ ዓላማም በደብረ-ማርቆስ ከተማ ውስጥ ባለ የሁለተኛ ደረጃ ትምህርት ቤት ተማሪዎች ዘንዴ የተማሪዎችን የትምህርት ውጤት ለማሻሻል የቤተሰብ መስተጋብር፣ የመምህራን ንቁ ስነ-ምግባር እና የተማሪዎች የግል ችግር ያላቸውን አስተዋፅኦ ማጥናት ነው።

የዚህ ጥናት መረጃ በደብረ-ማርቆስ ከተማ ውስጥ ባለ የሁለተኛ ደረጃ ትምህርት ቤቶች ከ9ኛ እና ከ10ኛ ክፍል ተማሪዎች ይሰበሰባል። ተሳትፎው ሙሉ በሙሉ በፈቃደኝነት የሚደረግ ሲሆን በዚህ ጥናት የሚሳተፉ ተማሪዎች ከተሳታፊነታቸው ጋር በተያያዘ ምንም ዓይነት ጉዳት አይደርስባቸውም። የጥናቱ ተሳታፊዎች በማንኛውም ጊዜ ከጥናቱ እራሳቸውን ሊያገሉ ይችላሉ። ተማሪዎቹ የሚሰጡት ምላሽ ሙሉ በሙሉ በምሥጢር ይያዛል። መጠይቁ ሁለት ክፍሎችን

የያዘ ሲሆን የመጀመሪያው ክፍል 4 ስለ ግላዊ መረጃ የሚጠይቁ ጥያቄዎችን፣ እንዲሁም ሁለተኛው ክፍል ስለ ቤተሰብ መስተጋብር፣ስለ መምህራንን ንቁ ሥነ-ምግባር፣ የተማሪዎች የግል የመማር ኀሊፊነትና ተነሳሽነት የሚለኩ 115 ጥያቄዎችን የያዘ ነው። መጠይቁን ለመሙላት በአማካይ 60 ደቂቃዎችን ይወስዳል።

በዚህ መጠይቅ አማካኝነት የሚሰበሰበው መረጃ ለትምህርት ጥናት አላማ ብቻ የሚውል ይሆናል። ይህንን ጥናት በተመለከተ ጥያቄ ካለዎት በስልክ ቁጥር +251912329150 ወይም በኢሜይሌ mekdan76@gmail.com አማካኝነት አጥኝውን ማነጋገር ይችላሉ። የስምምነት ቅጹን አንብበው በዚህ ጥናት ለመሳተፍ ከተስማሙ እባክዎ ከዚህ በታች ባለው ክፍት ቦታ ሊይ በመፈረም ስምምነትዎን ያረጋግጡ።

ፊርማ፡_____ቀን፡ _____

በዚህ ጥናት ላይ ለመሳተፍ ፍቃደኛ ስለሆኑ ከወዲሁ ከልብ አመሰግናለሁ!!!

ክፍል አንድ፡ ግላዊ መረጃዎች

መመሪያ፡ እባክዎ ከዚህ በታች ለተዘረዘሩት ግላዊ መረጃን የተመለከቱ ጥያቄዎች ምላሽዎን በተሰጠው ክፍት ቦታ ላይ ይፃፉ።

1. ፆታ፡ (1 = ወንድ እና 2 = ሴት) _____
2. የትምህርት ደረጃ፡ (1 = 9ኛ ክፍሌ እና 2 = 10ኛ ክፍሌ) _____
3. እድሜ፡ _____
4. የመጀመሪያው ወሰነ-ትምህርት ውጤትህ/ሽ በአማካኝ ስንት ነበር? _____

ክፍል ሁለት፡ የወላጆች የልጅ አስተዳደግ፣ የወላጅ ባህርይ፣ የትምህርት ተነሳሽነት፣ የተማሪዎች የመማር ኀላፊነት እና የመምህራን ንቁ ሥነ-ምግባር በተማሪዎች እይታ የሚለኩ መጠይቆች።

መጠይቅ አንድ፡ የወላጆች የልጅ አስተዳደግ መለኪያ

መመሪያ አንድ፡ የሚከተሉት ጥያቄዎች የወላጆች የልጅ አስተዳደግን በተመለከተ የቀረቡ ጥያቄዎች ናቸው፡፡ እባክዎ እነዚህን ጥያቄዎች በአግባቡ አንብበው ምላሽዎ **"በጣም አልስማማም"** ከሆነ "1" ን፣ **"አልስማማም"** ከሆነ "2" ን፣ **"መወሰን ያዳግተኛል"** ከሆነ "3" ን፣ **"እስማማለሁ"** ከሆነ "4" ን፣ **"በጣም እስማማለሁ"** ከሆነ "5" ን ያክቡ፡፡

ተ.ቁ.	የወላጆች የልጅ አስተዳደግን የተመለከቱ ጥያቄዎች	አማራጮች				
ሀ. ፈላጭ ቆራጭ						
1	ወላጆቼ/አሳዳጊዎቼ እኔ ያለስራ ነጻ ሁኜ ሊያዩኝ አይፈልጉም፡፡	1	2	3	4	5
2	ወላጆቼ/አሳዳጊዎቼ የሚሉትን ከመፈጸም ውጭ ምንም ጥያቄ እንዳነሳ አይፈቅዱልኝም፡፡	1	2	3	4	5
3	ወላጆቼ/አሳዳጊዎቼ ምንም ነጻነት አይሰጡኝም፡፡	1	2	3	4	5
4	ወላጆቼ/አሳዲጊዎቼ አንድ ነገር እንዳደርግ ሲያዝዙኝ ቁጣ በተሞላበት መንገድ ነው የሚነግሩኝ ፡፡	1	2	3	4	5
5	ወላጆቼ/አሳዳጊዎቼ ከጓደኞቼ ጋር ስጫወት ማየት አይፈልጉም ፡፡	1	2	3	4	5
ለ. ልቅ						
6	ወላጆቼ/አሳዳጊዎቼ ከራሳቸው በላይ ለእኔ ይጨነቃሉ፡፡	1	2	3	4	5
7	ወላጆቼ/አሳዲጊዎቼ ጥፋት ባጠፋም እንኳ ለምን የሚል ጥያቄ አያነሱብኝም ፡፡	1	2	3	4	5
8	ወላጆቼ/አሳዳጊዎቼ ጥፋተኛ መሆኔን ቢያውቁም ጥፋቴን ይደብቁልኛል፡፡	1	2	3	4	5
9	ወላጆቼ/አሳዳጊዎቼ እኔን ሁሌም እንደ ህጻን ልጅ ነው የሚንከባከቡኝ፡፡	1	2	3	4	5
10	ወላጆቼ/አሳዳጊዎቼ እኔን ማንም ሰው በመጥፎ ሁኔታ እንዲናገረኝ አይፈልጉም ፡፡	1	2	3	4	5
11	ወላጆቼ/አሳዳጊዎቼ ለእኔ ከፍተኛ እንክብካቤ ያደርጉልኛል ፡፡	1	2	3	4	5
ሐ. ጨዋ						
12	ለእኔ የሚሆኑኝን ጓደኞች የሚመርጡልኝ ወላጆቼ/አሳዳጊዎቼ ናቸው፡፡	1	2	3	4	5
13	ወላጆቼ/አሳዳጊዎቼ ለወደፊት ምን መሆን እንዳለብኝ ይነግሩኛል ፡፡	1	2	3	4	5
14	ወላጆቼ/አሳዳጊዎቼ ትዕዛዛቸውን ስፈጽም ያመሰግኑኛል፤ሳጠፋም ይቀጡኛል ፡፡	1	2	3	4	5
15	ወላጆቼ/አሳዳጊዎቼ የሚከተለትን እምነት እኔም መከተል እንዳለብኝ ይነግሩኛል ፡፡	1	2	3	4	5
16	ወላጆቼ/አሳድጊዎቼ ጨዋ ልጅ መሆን እንዳለብኝ ይነግሩኛል፡፡	1	2	3	4	5

17	*ወላጆቼ/አሳዳጊዎቼ ስለእኔ ጥሩ ተግባር ከሌሎች ሰዎች መስማት ያስደስታቸዋል::*	1	2	3	4	5
18	*ወላጆቼ/አሳዳጊዎቼ በአካባቢው ጥሩ አርአያ ናቸው የሚሏቸውን ሰዎች በመጥቀስ እንደነሱ እንድሆን ያበረታቱኛል።*	1	2	3	4	5
19	*ወላጆቼ/አሳዳጊዎቼ በእኔ መጥፎ ተግባር የእነርሱን ስም ማስጠራት እንደሌለብኝ ይነግሩኛል።*	1	2	3	4	5
መ. ምክንያታዊ						
20	*ወላጆቼ/አሳዳጊዎቼ እኔ ለማከናውናቸው ነገሮች ሁሉ ምክንያታዊ ሁኜ እንዳስረዳቸው ይነግሩኛል።*	1	2	3	4	5
21	*ወላጆቼ/አሳዳጊዎቼ እኔ ጥፋት ስፈጽም ከመቆጣት ይልቅ ምክንያቱን ተረድተው ይመክሩኛል።*	1	2	3	4	5
22	*ወላጆቼ/አሳዳጊዎቼ ማንኛውንም ነገር በኝርግራም ማከናወን እንዳለብኝ ይነግሩኛል ::*	1	2	3	4	5
23	*የሚያጋጥሙኝን ችግሮች ከወላጆቼ/ከአሳዳጊዎቼ ጋር በመወያየት መፍታት እንዳለብኝ ይነግሩኛል ::*	1	2	3	4	5
24	*ወላጆቼ/አሳዳጊዎቼ ለእኔ አንድ ነገር ለማድረግ ሲፈልጉ በቅድሚያ የእኔን ፍላጎትና ምርጫ ይጠይቁኛል።*	1	2	3	4	5
25	*ወላጆቼ/አሳዳጊዎቼ የእኔን መብት ይጠብቁልኛል ::*	1	2	3	4	5
26	*ወላጆቼ/አሳዳጊዎቼ እኔ በማነሳው ሐሳብ ላይ ጊዜ ሰጥተው ይዳምጡኛል።*	1	2	3	4	5

<u>መጠይቅ ሁለት፡ የወላጅ ባህርይ መለኪያ</u>

<u>**መመሪያ ሁለት፡**</u> **የሚከተሉት ጥያቄዎች የወላጆችን ባህርይ በተመለከተ የቀረቡ ጥያቄዎች ናቸው እባክዎ እነዚህን ጥያቄዎች በአግባቡ አንብበው ምላሽዎ "በጣም አልስማማም" ከሆነ "1" ን፣ "አልስማማም" ከሆነ "2" ን፣ "መወሰን ያዳግተኛል" ከሆነ "3" ን፣ "እስማማለሁ" ከሆነ "4" ን፣ "በጣም እስማማለሁ" ከሆነ "5" ን ያክቡ።**

ተ.ቁ.	**ስለ ወላጁ ባህሪ የተመለከቱ ጥያቄዎች**	**አማራጮች**				
ሀ. አዎንታዊ ወላጅነት						
1	ወላጆቼ/አሳዳጊዎቼ አንድ ነገር ልነግራቸው ስፈልግ ጊዜ ሰጥተው ያዳምጡኛል።	1	2	3	4	5
2	ወላጆቼ/አሳዳጊዎቼ እኔ በምናገረው ነገር ላይ ፍላጎት ያሳያሉ።	1	2	3	4	5
3	ወላጆቼ/አሳዳጊዎቼ ጥሩ ሥነ-ምግባር ሳሳይ ያመሰግኑኛል።	1	2	3	4	5
4	ወላጆቼ/አሳዳጊዎቼ በእኔ እንደተደሰቱ ያሳውቁኛል።	1	2	3	4	5

5	ወላጆቼ/አሳዳጊዎቼ ጥሩ ሥራ እንደሰራሁ ይነግሩኛል።	1	2	3	4	5
6	ወላጆቼ/አሳዳጊዎቼ በርግጠኝነት እንደሚወደኝ እንዳውቅ ያደርጋሉ።	1	2	3	4	5
7	ወላጆቼ/አሳዳጊዎቼ የቻልኩትን ሁሉ እንዳደርግ ያበረታቱኛል።	1	2	3	4	5
8	ወላጆቼ/አሳዳጊዎቼ ለእርዳታ ወይም ለምክር ሁልጊዜ ወደ እነርሱ መሄድ እንደምችል ማወቄን ያረጋግጣሉ።	1	2	3	4	5
ለ. ተግሳጽ						
9	ታዛዥ ባሌሆንኩ ጊዜ፣ ወላጆቼ/አሳዳጊዎቼ ከባድ ስራ በማሰራት ይቀጡኛል።	1	2	3	4	5
10	ወላጆቼን /አሳዳጊዎቼን ባልታዘዝኩ ጊዜ ለቅጣት ብቻዬን ተለይቼ እንድቆይ ያደርጉኛል።	1	2	3	4	5
11	እኔ ታዛዥ ባልሆንኩ ጊዜ፣ ወላጆቼ/አሳዳጊዎቼ ከጓደኞቼ ጋር እንዳልጫዎት ይከለክሉኛል።	1	2	3	4	5
12	ታዛዥ ባልሆንኩ ጊዜ፣ ወላጆቼ/አሳዳጊዎቼ ቶሎ እንድተኛ በማድረግ ይቀጡኛል።	1	2	3	4	5
ሐ. ከባድ ቅጣት						
13	አልታዘዝም ስል ወይም ባለጌ ስሆን ወላጆቼ/አሳዳጊዎቼ አካላዊ ድብደባ በማድረግ ይቀጡኛል።	1	2	3	4	5
14	አመጸኛ ወይም ባለጌ ስሆን ወላጆቼ/አሳዳጊዎቼ እኔን ለመደብደብ ቀበቶ ወይም ዱላ ይጠቀማሉ።	1	2	3	4	5
መ. የቁሳቁስ ሽልማት						
15	ወላጆቼ/አሳዳጊዎቼ ለጥሩ ባሕርዬ ሽልማት ገንዘብ ይሰጡኛል።	1	2	3	4	5
16	ወላጆቼ/አሳዳጊዎቼ ለጥሩ ባሕርዬ ሽልማት ስጦታዎችን ይሰጡኛል።	1	2	3	4	5
ሠ. የደንብ ቅንብር						
17	ወላጆቼ/አሳዳጊዎቼ በትምህርት ቤት ውሰጥ ጨዋ እንድሆን ያስተምሩኛል።	1	2	3	4	5
18	ወላጆቼ/አሳዳጊዎቼየሌሎችን ሰዎች ንብረት እንድጠብቅ ያስተምሩኛል።	1	2	3	4	5
19	ወላጆቼ/አሳዳጊዎቼ በቤት ውስጥ ያለትን ህጎች እንድጠብቅ ያስተምሩኛል።	1	2	3	4	5

20	*ወላጆቼ/አሳዳጊዎቼ በትምህርት ቤት ውስጥ ያለትን ሀሳች እንድጠብቅ ያስተምሩኛል።*	1	2	3	4	5

<u>መጠይቅ ሦስት፡ የትምህርት ተነሳሽነት መለኪያ</u>

<u>መመሪያ ሶስት፡</u> የሚከተለት ጥያቄዎች የተማሪዎችን የትምህርት ተነሳሽነት በተመለከተ የቀረቡ ናቸው።እባክዎ እነዚህን ጥያቄዎች በአግባቡ አንብበው ምላሽዎ **"በፍፁም አይተገበርም"** ከሆነ "1" ን፣ **"ብዙም አይተገበርም"** ከሆነ "2" ን፣ **"አልፎ አልፎ ይተገብራል"** ከሆነ "3" ን፣ **"ብዙ ጊዜ ይተገበራል"** ከሆነ "4" ን፣ **"ፍፁም ይተገበራል"** ከሆነ "5" ን ያክቡ።

ተ.ቁ.	**የትምህርት ተነሳሽነትን የተመለከቱ ጥያቄዎች**	**አማራጮች**				
ለምን የሁለተኛ ደረጃ ትምህርትህን/ሽን ትከታተላለህ/ሽ?						
1	አዳዲስ ነገሮችን በመማር ደስታ እና እርካታ ስለማገኝ ነው።	1	2	3	4	5
2	ከአሁን በፊት ያላየኋቸውን አዳዲስ ነገሮችን ማግኘት ደስታ ስለሚሰጠኝ ነው።	1	2	3	4	5
3	ለኔ ጠቃሚ በሆኑ የትምህርት አይነቶች ላይ የዕውቀት አድማሴን ማስፋት ደስታ ስለሚሰጠኝ ነው።	1	2	3	4	5
4	የትምህርት ውጤቴ ብዙ የሚያስደስቱኝን ነገሮች ለመማር እንድቀጥል ስለሚፈቅድልኝ ነው።	1	2	3	4	5
5	በትምህርቴ ራሴን ከፍተኛ ደረጃ ማድረስ ደስታ ስለሚሰጠኝ ነው።	1	2	3	4	5
6	ከግሌ ክንዋኔዎቼ በአንዱ ራሴን ከፍተኛ ደረጃ ማድረስ ደስታ ስለሚሰጠኝ ነው።	1	2	3	4	5
7	በከባድ የትምህርት ሥራዎች ማለፍ የእርካታ ሥሜት ስለሚፈጥርልኝ ነው።	1	2	3	4	5
8	ትምህርቴ በእውቀት የመላቅ ተልዕኮዬን በማሳካት ግላዊ እርካታ ለማግኘት ስለሚያስችለኝ ነው።	1	2	3	4	5
9	የራሴ የሆኑ ሃሳቦችን ለሌሎች ማካፈል እጅግ በጣም ከፍተኛ ስሜትን ስለሚፈጥርልኝ ነው።	1	2	3	4	5

10	በታዋቂ ምሁራን የተፃፉ የትምህርት መጻሕፍትን ማንበብ ደስታ ስለሚፈጥርልኝ ነው።	1	2	3	4	5
11	የተለያዩ ምሁራን የጻፏቸውን የትምህርት መጻህፍትን በተመስጦ በማንበብ ከራስ ጋር ማዋሀድ ደስታ ስለሚፈጥርልኝ ነው።	1	2	3	4	5
12	የሚያስደስቱ የተለያዩ የትምህርት አይነቶችን ማንበብ እጅግ በጣም ከፍተኛ ስሜት ስለሚፈጥርልኝ ነው።	1	2	3	4	5
13	የሁለተኛ ደረጃ ትምህርቴ ወደፊት ወደ ዩኒቨርስቲ ለመግባትና ለመዘጋጀት ይረዳኛል ብዬ ስለማስብ ነው።	1	2	3	4	5
14	ምክንያቱም ከጊዜ በኋላ የተሻለ ሥራ ለማግኘት።	1	2	3	4	5
15	ምክንያቱም በኋላ ላይ "ጥሩሕይወት" እንዲኖረኝ ስለምፈልግ።	1	2	3	4	5
16	ምክንያቱም ከጊዜ በኋላ የተሻለ ደሞዝ ለማግኘት።	1	2	3	4	5
17	ምክንያቱም ትምህርቴ ለመረጥኩት ሥራ የተሻለ ዝግጅት ለማድረግ ይረዳኛል ብዬ ስላሰብሁ።	1	2	3	4	5
18	*ምክንያቱም ውሎ አድሮ ወደ ምወደው የሥራ መስክ ለመግባት ስለሚያስችለኝ።*	1	2	3	4	5
19	*ምክንያቱም የተሻለ የስራ ምርጫ እንዳደርግ ስለሚረዳኝ።*	1	2	3	4	5
20	ምክንያቱም ጥቂት ተጨማሪ የትምህርት ዓመታት የስራ ብቃቴን ያሻሽላል የሚል እምነት ስላለኝ።	1	2	3	4	5
21	የሁለተኛ ደረጃ ትምህርቴን ማጠናቀቅ የምችል መሆኔን ለማረጋገጥ።	1	2	3	4	5
22	ምክንያቱም በትምህርቴ ስኬታማ ስሆን የትልቅ ሰውነት ስሜት ስለሚሰማኝ።	1	2	3	4	5
23	*ምክንያቱም የማሰብ ችሎታዬን ለራሴ ለማሳየት።*	1	2	3	4	5
24	*ምክንያቱም በጥናቴ ስኬታማ መሆን እንደምችል ራሴን ማሳየት ስለምፈልግ።*	1	2	3	4	5
25	*እውነቱን ለመናገር ለምን እንደሆነ ባላውቅም በትምህርት ጊዜዬን እያባከንኩ እንደሆነ ይሰማኛል።*	1	2	3	4	5
26	*የምማርበት በቂ ምክንያት ነበረኝ፤አሁን ላይ ግን እርግጠኛ አይደለሁም።*	1	2	3	4	5

27	*እውነቱን ለመናገር ወደ ትምህርት የገባሁበት ምክንያት አይታየኝም፤ ለነገሩ ብዙም ግድ አይሰጠኝም።*	1	2	3	4	5
28	*አላውቅም፤ በትምህርት ቤት ውስጥ ምን እየሰራሁ እንደሆነ አልገባኝም።*	1	2	3	4	5

<u>መጠይቅ አራት፡ የተማሪዎች የመማር ኀላፊነት</u>

<u>መመሪያ አራት፡</u> የሚከተሉት ጥያቄዎች የተማሪዎችን የመማር ኀላፊነት በተመለከተ የቀረቡ ናቸው። ጥያቄዎችን በአግባቡ አንብበው ምሊሽዎ **“ፍፅሞ በጭራሽ”** ከሆነ “1” ን፣ **“በጭራሽ”** ከሆነ “2” ን፣ **“እርግጠኛ አይደለሁም”** ከሆነ “3” ን፣ **“ብዙ ጊዜ”** ከሆነ “4” ን፣ እንዲሁም **“ሁሌም እውነት ነው”** ከሆነ “5” ን ያክብቡ።

ተ.ቁ.	የተማሪዎችን የመማር ኀላፊነት የተመለከቱ ጥያቄዎች	አማራጮች				
ሀ. በትምህርት ወቅት ያለ የመማር ሓላፊነት						
1	ለመናገር እና ጥያቄዎችን ለመጠየቅ ከመምህሬ ፈቃድ እጠይቃለሁ።	1	2	3	4	5
2	በመምህሬ የተሰጠውን የቤት ሥራ ሙሉ በሙሉ አስተውላለሁ ።	1	2	3	4	5
3	የመናገር ፍቃድ ለመጠየቅ እጄን አነሳለሁ።	1	2	3	4	5
4	በቡድን በሚደረጉ የትብብር ሥራዎች ውስጥ ማድረግ ያለብኝን አከናውናለሁ።	1	2	3	4	5
5	መምህሬ ትኩረት እንድናደርግባቸው የሚፈልጋቸውን ቃላቶች ወዲያውኑ እጽፋለሁ።	1	2	3	4	5
6	የክፍል ሥራዬን ወዲያውኑ እሰራለሁ።	1	2	3	4	5
7	በቡድን ሥራ ለመሳተፍ ፈቃደኝነት አሳያለሁ።	1	2	3	4	5
8	በትምህርት ወቅት በሚሰሩ ሥራዎች ውስጥ በጉጉት እሳተፋለሁ።	1	2	3	4	5
9	መምህሬ ባሳየኝ/ችኝ መሠረት የክፍል ውስጥ ተግባራትን ለማከናወን እጥራለሁ።	1	2	3	4	5
10	መምህሬ እና ጓደኞቼ የሚናገሩትን በጥንቃቄ አዳምጣለሁ።	1	2	3	4	5
11	መምህሩ ከመምጣቱ በፊት የትምህርት መርጃ መሣሪያዎችን አዘጋጃለሁ	1	2	3	4	5

12	የክፍል ሥራዬን በአስተማሪዬ ማብራሪያ መሰረት ለመስራት እሞክራለሁ።	1	2	3	4	5
13	መምህራኖቼ ወይም ጓደኞቼ ሲናገሩ አላቋርጣቸውም።	1	2	3	4	5
ለ. ከትምህርት ሰዓት ውጭ ያለ የመማር ሓላፊነት						
14	በማስታወሻ ደብተሬ ላይ ጠቃሚ ሆኖ ያገኘሁትን መረጃ ከማብራሪያ ጋር ምልክት አደርግበታለሁ።	1	2	3	4	5
15	በማጠናበት ጊዜ መረጃን የበለጠ ግልጽ ለማድረግ ምልክትን እፈጥራለሁ	1	2	3	4	5
16	የተማርኩትን ትምህርት አሳጥሬ እይዛለሁ።	1	2	3	4	5
17	ትምህርቱን በማጠቃልልበት ወቅት ሠንጠረዥ፣ምስል እና ግራፎችን እጠቀማለሁ ::					
18	በመጽሐፍ ውስጥ ባነበብኩት ጽሐፍ ውስጥ ጠቃሚ ሆነው ያገኘኋቸውን ነጥቦች ምልክት አደርጋለሁ።	1	2	3	4	5
19	*በማስታመሻ የያዝኳቸውንና ያልገቡኝን ርዕሰ ጉዳዮች እና ቃላት አስተማሪዬን እጠይቃለሁ ::*	1	2	3	4	5
20	*በምማርበት ጊዜ ያልገቡኝን እና የማላውቃቸውን ርዕሰ ጉዳዮች ከትምህርቱ በኋላ አጠናለሁ።*	1	2	3	4	5
21	በሚቀጥለው ቀን የምንማራቸውን የትምህርት አይነቶች ቀድሜ አነባለሁ።	1	2	3	4	5
22	በክፍሌ እና በትምህርት ቤቱ ማስታወቂያ ሰሌዳ ላይ የተነገሩትን ማስታወቂያዎችን እና መረጃዎችን ተከታትዬ አነባለሁ።	1	2	3	4	5
23	ቤት ውስጥ በማጠናበት ጊዜ እንደ መዝገበ-ቃላት፣ ካርታ፣ የተለያዩ ካርታዎችን የያዙ መጽሃፎችን /አትላስ/ ወዘተ ያሉትን መርጃ መሳሪያዎች እጠቀማለሁ።	1	2	3	4	5
24	*የተሰጡኝን ሥራዎች ለመስራት ቤተ-መጻሕፍትን እና ሌሎች የጽሁፍ ምንጮችን እጠቀማለሁ።*	1	2	3	4	5

መጠይቅ አምስት፡ የመምህራን ንቁ ሥነ-ምግባር በተማሪዎች አረዳድ

መመሪያ አምስት፡ የሚከተሉት ጥያቄዎች የመምህራኖቻቹህን ንቁ ስነ-ምግባር በተመለከተ የቀረቡ ጥያቄዎች ናቸው፡፡ እባክዎ እነዚህን ጥያቄዎች በአግባቡ አንብበው ምላሽዎ **"በጣም አልስማማም"** ከሆነ "1" ን፣ "**አልስማማም**" ከሆነ "2" ን፣ "**መወሰን ያዳግተኛል**" ከሆነ "3" ን፣ "**እስማማለሁ**" ከሆነ "4" ን፣ "**በጣም እስማማለሁ**" ከሆነ "5" ን ያክብቡ፡፡

ተ.ቁ.	የመምህራን ንቁ ሥነ-ምግባር በተማሪዎች አረዳድ የተመለከቱ ጥያቄዎች	አማራጮች				
ሀ. ርህራሔን በተመለከተ						
1	መምህሬ ተማሪዎች በመማር ሂደታቸው ላይ የሚያጋጥሟቸውን ፈተናዎች እንደሚያውቅ/እንደምታውቅ አምናለሁ፡፡	1	2	3	4	5
2	አስተማሪዬ ትምህርቶችን ሲያቅድ/ስታቅድ የተማሪዎችን የተለያዩ የመማር ስሌቶችን እና ችሎታዎችን ግምት ውስጥያስገባል/ታስገባለች፡፡	1	2	3	4	5
3	አስተማሪዬ የእያንዳንዱን ተማሪ ፍላጎት ለማሟላት ሲል የማስተማር ዘዴዎችን በማስተካከል ርህራሄን ያሳያል/ታሳያለች፡፡	1	2	3	4	5
4	መምህሬ የተማሪዎችን ስሜት እውቅና በመስጠት ርህራሄን ይገልፃል/ትገልጻለች፡፡	1	2	3	4	5
ለ. ማበረታታን በተመለከተ						
5	መምህሬ ተስፋ እንዳልቆርጥ የሚያደርጉ እና ለመሻሻሌ የሚያግዙ ጠቃሚ ምክሮችን ይሰጠኛል/ትሰጠኛለች፡፡	1	2	3	4	5
6	ተማሪዎች በክፍል ውስጥ ጥሩ ሲሰሩ አስተማሪዬ አዎንታዊ ግብረ መልስ ይሰጣል/ትሰጣለች፡፡	1	2	3	4	5
7	መምህሬ በእኛ በተማሪዎች መካከል ትብብርን የሚያጠናክር ምቹ አካባቢ ይፈጥራል/ትፍጥራለች፡፡	1	2	3	4	5
8	መምህሬ የባለቤትነት ስሜትን ያበረታታል/ታበረታታለች፣ መማርን አስደሳች ያደርገዋል/ታደርግዋለች፡፡	1	2	3	4	5
ሐ. አዎንታዊ አስተሳሰብን በተመለከተ						

9	አስተማሪዬ በክፍሌ ውስጥ አዎንታዊ በሆነ መንገድ ይነጋገራል/ትነጋገራለች።	1	2	3	4	5
10	በትምህርቴ ላይ ችግሮች ሲያጋጥሙኝ አስተማሪዬ ድጋፍ ያደርግልኛል/ታደርግልኛለች።	1	2	3	4	5
11	ድጋፍ እንደሚሰጠኝ በማወቁ ወደ መምህሮቼ ጥያቄዎችን ይዤ ስቀርብ ምቾት ይሰማኛል።	1	2	3	4	5
መ. መረጋጋትን በተመለከተ						
12	አስተማሪዬ ፈታኝ በሆኑ ሁኔታዎች ውስጥም ቢሆን የተረጋጋ/ች ነው/ናት።	1	2	3	4	5
13	አስተማሪዬ ጽንሰ-ሀሳቦችን ሲያብራራ/ስታብራራ ወይም ጥያቄዎችን ሲመልስ/ስትመልስ ትዕግስት ያሳያል/ታሳያለች።	1	2	3	4	5
14	*አስተማሪዬ የሃሳብ ልዩነቶችን እና የተለያዩ አመለካከቶችን እንደሚታገስ /እንደምትታገስ ተረድቻለሁ።*	1	2	3	4	5
15	*መምህሬ ምንም ነገር ሳይረብሸው/ሳይረብሻት በትምህርት አካባቢ ላይ ካሉ ለውጦች ጋር ይላመዳል/ትላመዳለች።*	1	2	3	4	5
16	መምህሬ ውጥረትን በእርጋታ በመቆጣጠር ረገድ ምሳሌ ይሆናል/ትሆናለች።	1	2	3	4	5
17	መምህሬ ያልተጠበቁ ክስተቶችን በቁጥጥር ስሜት እንደሚይዝ/እንደምትይዝ አስተውያለሁ።	1	2	3	4	5

Appendix C

Scatter Plot output to assess linear relationship between the independent and dependent variables

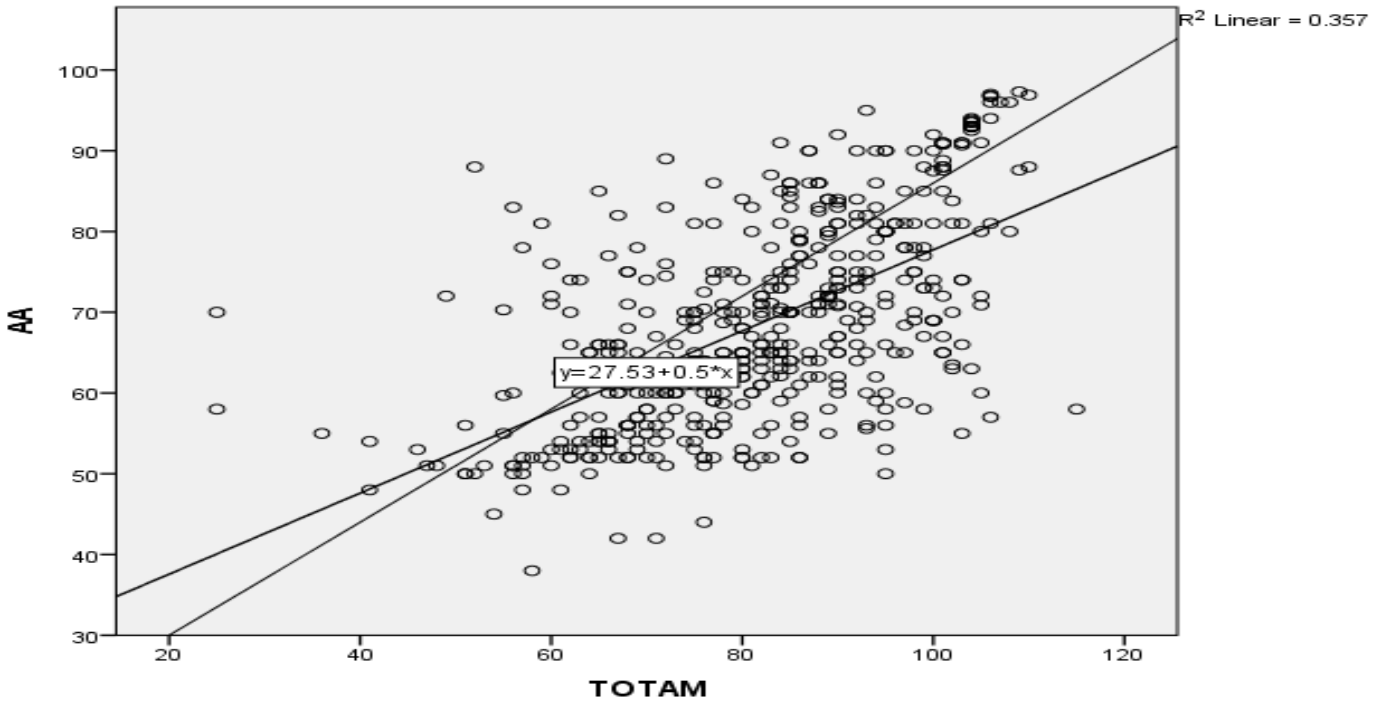

Linear relationship between academic motivation and academic achievment

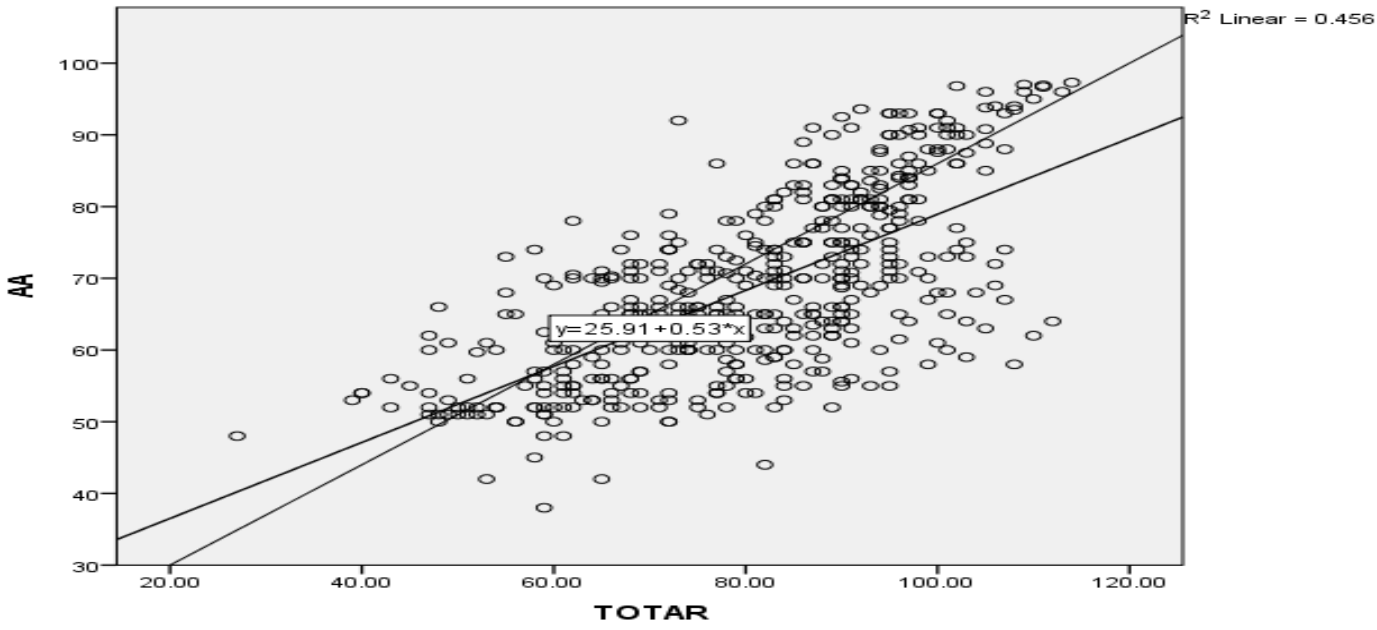

Linear relationship between academic responsibility and academic achievement

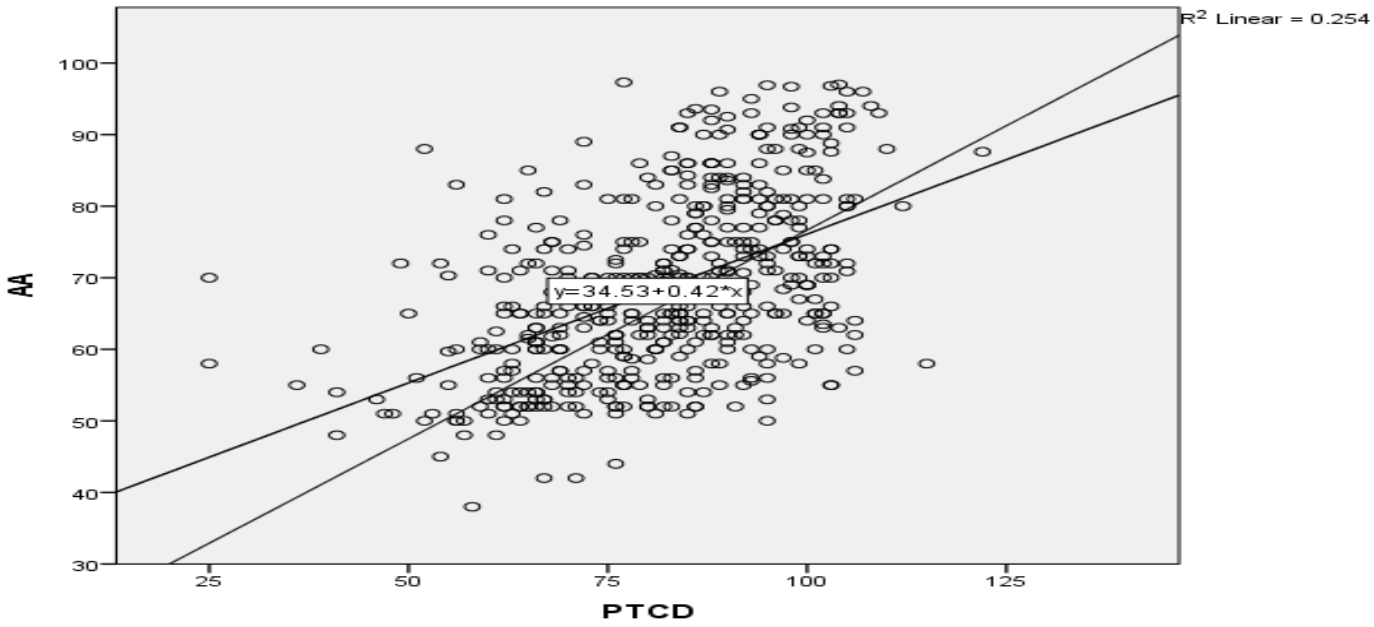

Linear relationship between student-perceived teachers' conscious discipline and academic achievement

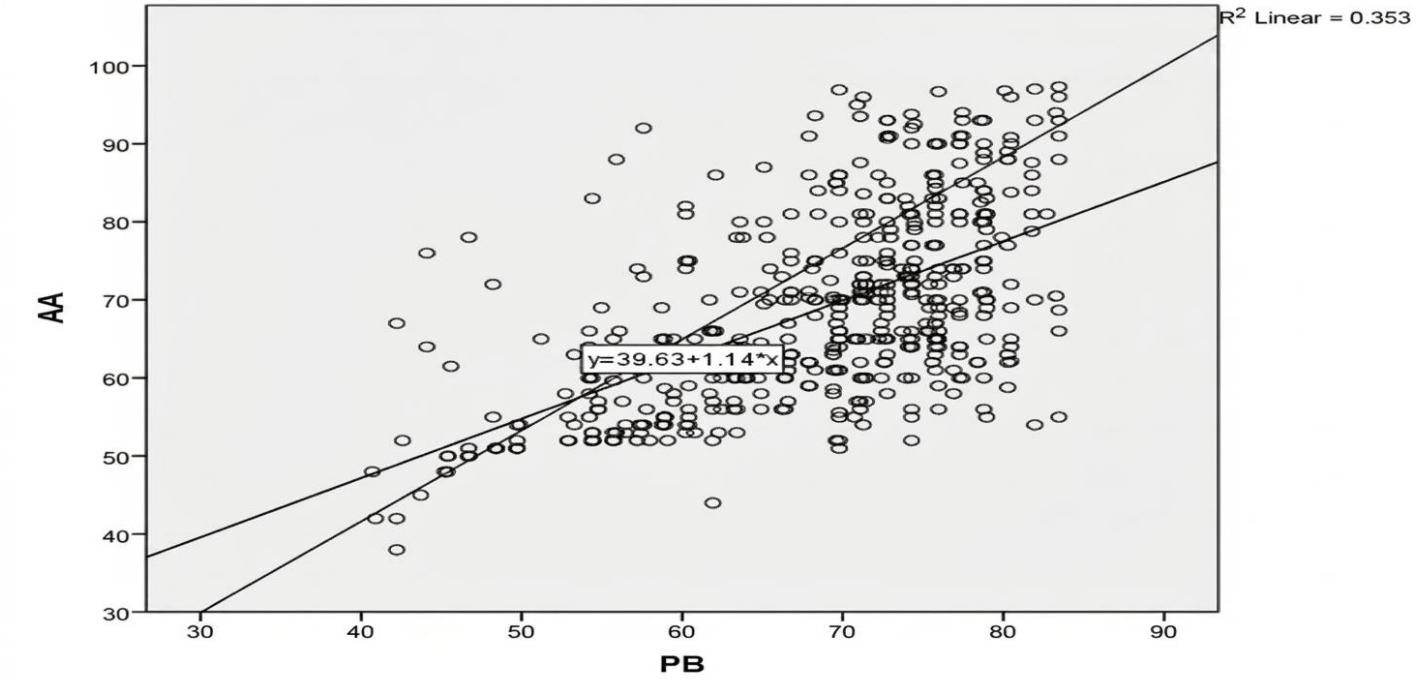

Linear relationship between parental behavior and academic achievement

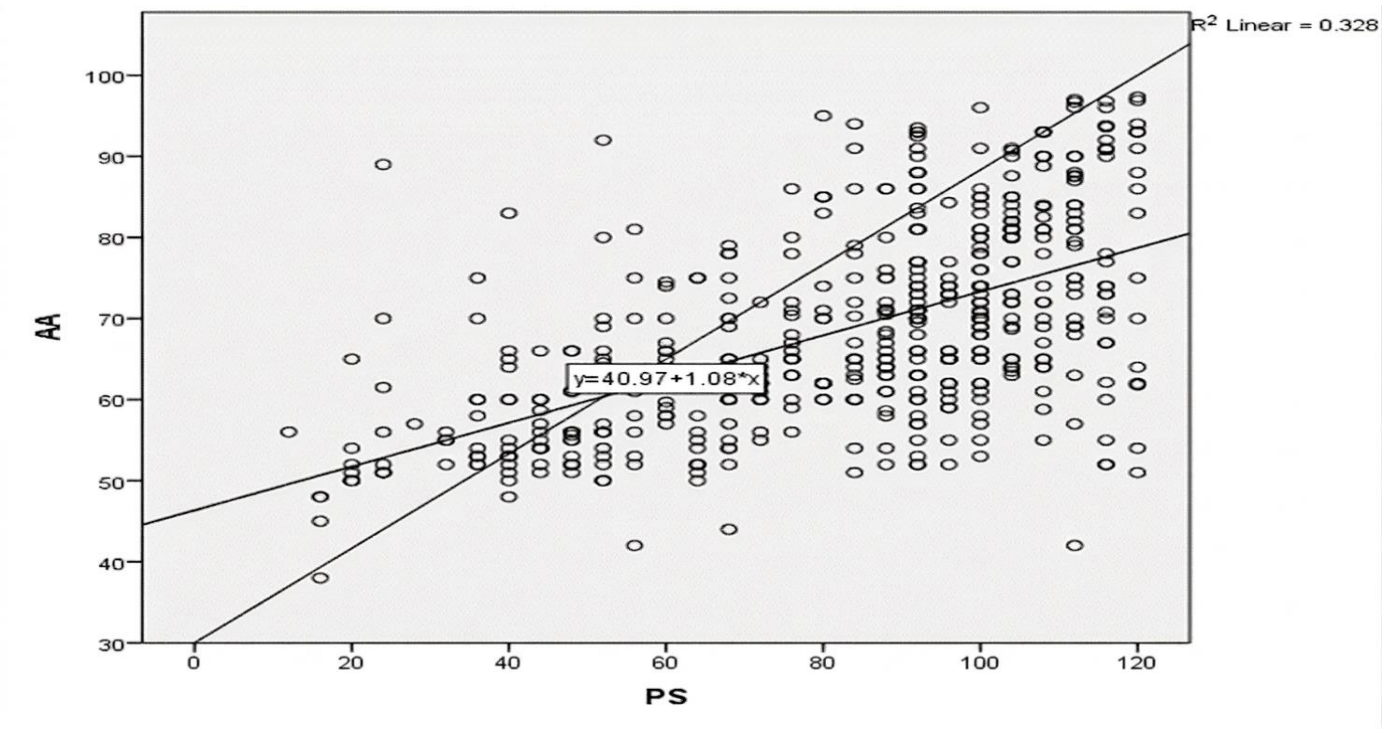

Linear relationship between parenting style and academic achievement

Appendix D

Normality

The normality of the data was assessed by examining skewness and kurtosis statistics, commonly used indicators for evaluating the distribution of data. According to Kline (2005), data can be considered to demonstrate an acceptable level of normality when the absolute skewness value is below 3, and the absolute kurtosis value is below 10. As presented in the table below, all skewness and kurtosis values in the present study fell within these recommended thresholds. Therefore, the results indicate that the data did not show any serious violation of the normality assumption.

Skewness and Kurtosis

Descriptives			Statistic	Std. Error
Parental behavior	Mean		61.7420	.41850
	95% Confidence Interval for Mean	Lower Bound	60.9198	
		Upper Bound	62.5642	
	5% Trimmed Mean		62.0267	
	Median		63.0000	
	Variance		87.571	
	Std. Deviation		9.35792	
	Minimum		31.00	
	Maximum		86.00	
	Range		55.00	
	Interquartile Range		14.00	
	Skewness		-.482	.109
	Kurtosis		.150	.218
Academic Motivation	Mean		81.72	.663
	95% Confidence Interval for Mean	Lower Bound	80.42	
		Upper Bound	83.03	
	5% Trimmed Mean		82.17	
	Median		83.00	
	Variance		219.840	
	Std. Deviation		14.827	
	Minimum		25	

	Maximum		115	
	Range		90	
	Interquartile Range		22	
	Skewness		-.420	.109
	Kurtosis		.154	.218
Academic responsibility	**Mean**		80.4380	.70931
	95% Confidence Interval for Mean	**Lower Bound**	79.0444	
		Upper Bound	81.8316	
	5% Trimmed Mean		80.8000	
	Median		82.0000	
	Variance		251.561	
	Std. Deviation		15.86068	
	Minimum		27.00	
	Maximum		114.00	
	Range		87.00	
	Interquartile Range		23.00	
	Skewness		-.248	.109
	Kurtosis		-.210	.218
Social responsibility	**Mean**		83.6220	.48194
	95% Confidence Interval for Mean	**Lower Bound**	82.6751	
		Upper Bound	84.5689	
	5% Trimmed Mean		83.7756	
	Median		84.5000	
	Variance		116.135	

	Std. Deviation		10.77661	
Parenting style	**Minimum**		50.00	
	Maximum		116.00	
	Range		66.00	
	Interquartile Range		14.00	
	Skewness		-.258	.109
	Kurtosis		.222	.218
	Mean		68.56	.557
	95% Confidence Interval for Mean	**Lower Bound**	67.47	
		Upper Bound	69.65	
	5% Trimmed Mean		68.24	
	Median		67.00	
	Variance		155.002	
Academic achievement	**Std. Deviation**		12.450	
	Minimum		38	
	Maximum		97	
	Range		59	
	Interquartile Range		18	
	Skewness		-1.071	.109
	Kurtosis		1.056	.218

Appendix E

Multicollinearity

Multicollinearity was assessed using tolerance and variance inflation factor (VIF) statistics. Tolerance values for the predictor variables ranged from .538 to .863, and VIF values ranged from 1.159 to 1.858. All tolerance values were well above the minimum acceptable criterion of .10, and all VIF values were substantially below the commonly recommended threshold of 5. These findings indicate that there was no serious multicollinearity among the predictor variables. Thus, the predictors could be retained in the regression model without concern that excessive intercorrelations would substantially distort the regression estimates.

	Unstandardized		**Standardized**		**95.0% Confidence Interval for B**		**Collinearity Statistics**	
All Variables	**B**	**Std. Error**	**Beta**	**t**	**Lower Bound**	**Upper Bound**	**Tolerance**	**VIF**
Parenting Style	.008	.003	.009	2.667**	.002	.014	.797	1.255
Parental Behavior	.064	.050	.048	1.276	-.035	.163	.685	1.461
Perceived Teachers' Conscious Discipline	.018	.002	.206	8.325***	.015	.022	.863	1.159
Aacademic motivation	.236	.034	.281	6.851***	.168	.304	.580	1.723
Aacademic responsibility	.398	.033	.507	11.895***	.332	.463	.538	1.858

Sub-components of PS	***B***	***SE***	***β***	***t***	***p***	**95% CI**		**Collinearity Statistics**	
						LL	***UL***	**Tolerance**	***VIF***

Autocratic	-.367	.094	-.151	-3.921	.000	-.552	-.183	.763	1.311
Pampering	-.733	.094	-.263	-7.758	.000	-.918	-.547	.992	1.008
Decent	.283	.075	.139	3.761	.000	.135	.431	.836	1.197
Reasoning	.873	.076	.464	11.504	.000	.724	1.022	.701	1.426

Sub-components of PB	***B***	***SE***	***β***	***t***	***p***	**95% CI**		**Collinearity Statistics**	
						LL	***UL***	**Tolerance**	***VIF***
Positive parenting	.561	.069	.327	8.107	.000	.425	.698	.597	1.675
Discipline	-.869	.115	-.280	-7.576	.000	-1.094	-.643	.712	1.405
Material rewarding	.666	.177	.133	3.764	.000	.319	1.014	.774	1.292
Rulesetting	.301	.140	.085	2.151	.032	.026	.576	.627	1.594
Harsh punishment	-.700	.178	-.149	-3.937	.000	-1.049	-.351	.679	1.474

Sub-components of PTCD	***B***	***SE***	***β***	***t***	***p***	**95% CI**		**Collinearity Statistics**	
						LL	***UL***	**Tolerance**	***VIF***
Empathy	.900	.247	.182	3.639	.000	.416	1.384	.650	2.193

Encouragement	.906	.248	.178	3.658	.003	.420	1.392	.684	2.263
Positive intent	.469	.230	.107	2.034	.042	.016	.921	.702	1.425
Composure	.838	.220	.115	3.809	.000	.407	1.269	.426	2.347

Sub-components of AM	***B***	***SE***	***β***	***t***	***p***	**Collinearity Statistics**	
						Tolerance	***VIF***
Intrinsic motivation to know	.065	.006	.438	10.833	.000	.606	1.876
Intrinsic motivation to accomplish	.041	.006	.269	6.362	.000	.742	1.654
Intrinsic motivation experience stimulation	.008	.006	.050	1.368	.172	.815	1.456
Extrinsic motivation external regulation	.011	.006	.067	1.798	.063	.598	1.672
Extrinsic motivation identified	-.015	.007	-.088	-2.158	.021	.678	1.729
Extrinsic motivation introjected	-.016	.005	-.108	-2.993	.002	.843	1.256
Amotivation	-.024	.004	-.184	-5.381	.000	.928	1.836

Sub-components of AR	***B***	***SE***	***β***	***t***	***p***	**95% CI**		**Collinearity Statistics**	
						LL	***UL***	**Tolerance**	***VIF***

Learning responsibility during class	.482	.056	.405	8.654	.000	.372	.591	.754	2.467
Learning responsibility outside class	.460	.060	.357	7.614	.000	.342	.579	.654	2.204

Appendix F

Syntax for user-defined estimands for SEM

'PB to ACHS via AM

Ind1=PathB*PathJ

'PB to ACHS via AR

Ind2=PathC*PathK

'TCD to ACHS via AM

Ind3=PathD*PathJ

'TCD to ACHS via AR

Ind4=PathF*PathK

'PS to ACHS via AM

Ind5=PathG*PathJ

'PS to ACHS via AR

Ind6=PathH*PathK

'Total indirect effect of PB on ACHS

Tind1=PathB*PathJ+PathC*PathK

'Total indirect effect of TCD on ACHS

Tind2=PathD*PathJ+PathF*PathK

'Total indirect effect of PS on ACHS

Tind3=PathG*PathJ+PathH*PathK

'Total effect of PB on ACHS

Teff1=PathB*PathJ+PathC*PathK+PathA

'Total effect of TCD on ACHS

Teff2=PathD*PathJ+PathF*PathK+PathE

'Total effect of PS on ACHS

Teff3=PathG*PathJ+PathH*PathK+PathI